Office of Energy Efficiency Rebuild America

Oregon Department of Energy &

Green Building Services

"Mechanical Systems"

Julian de Bullet

HVAC Systems Manager,McQuay International

December 12.2003

Analyze your design!

Elementary Schools

- 10 -12 Classrooms, Admin, Gym, Library
- Heated And Ventilated - Maybe Air Conditioned
- Science Rooms
- Attached Daycare
- Occupied 7am To 3pm
- Light Summer Use

Middle Schools

- Everything In Elementary Schools
- Usually Air Conditioned
- Computer Rooms
- Locker Rooms
- Open Longer Periods
- Now Being Used Year Round!

High Schools

- Includes Interior Zones
- Air Conditioning Required
- Large Buildings - 200,000 ft^2
- High Population - 2000+ People
- Open Longer Periods
- Used In Summers
- Other Spaces Include; Cafeterias, Natatoriums, Skating Rinks, Industrial Shops, Home Economics, Stores, Auto Repair Shops,

School HVAC Systems

Technology Impact

- Computers Out Of The Lab, Into The Classroom
  - 10 Million Computers for Instructional Use
    - One Computer for Every 5 Students
- Computers Impact Power
  - Wiring Upgrades
    - Asbestos Considerations
  - Increased Power Consumption
  - Power Conditioning Required
  - Additional Power Drops or Outlets
- Computers Add Heat
  - Impact HVAC Requirements
    - 5 Computers raises HVAC Cooling Needs by 25%
    - 20 Computers Doubles HVAC
- Expanded Space Required
  - Each Computer uses Space of 1.5 Students
- Furnishings Changing
  - Larger Desktops, Cable Trays, etc.

What Is The School HVAC System Of Choice That Satisfies Schools Needs?

Efficient School Design

Typical Systems Considered for Schools are:

- Heating Only - Hot Water or Steam
- Rooftop Single Zone
- Rooftop <u>With Heat Wheel</u>
- 4 Pipe UV with Valve Control
- Variable Air Volume

Efficient School Design

Typical Systems Considered for Schools cont.:

- Split System Unit Ventilators
- Air to Air Heat Pumps
- Water Source Heat Pumps
- 2 Pipe UV with Face and Bypass Damper Control

Condensing Boilers

- Condensing Boilers extract more heat for same fuel
- Flue gas temperatures are reduced
- Water vapor is condensed out
- Extra (latent) heat is provided
- They "scavenge" heat, normally lost
- Natural gas, LPG or Oil
- 85% to 95% efficient
- 2-4 year payback

- Modular heating plant concept
- Modules are step fired
- Avoids short-cycling
- Flexibility results in annual energy savings
- Installation cost savings
- Tailored to boiler room dimensions
- Multi fuel capabilities

Efficient School Design

A Lot of System Choices.....

Which One IS the Right One?

Unit Ventilators

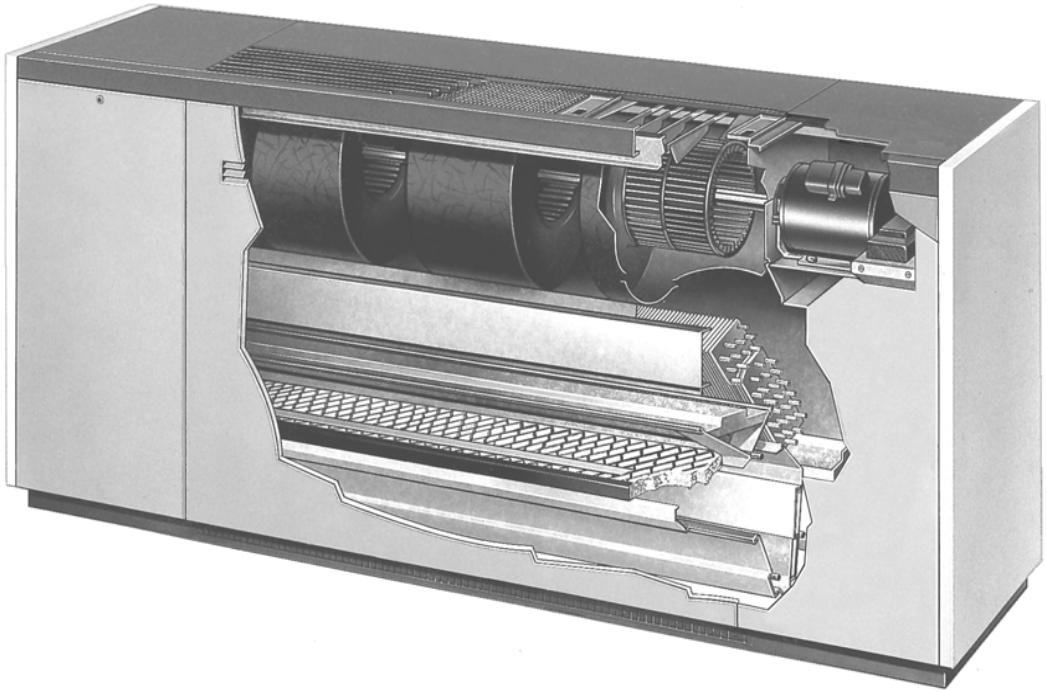

- Only HVAC System Designed For Schools
- Small To Medium Schools
- Big Retrofit Market

Water Source Heat Pumps

Ground Source Heat Pumps

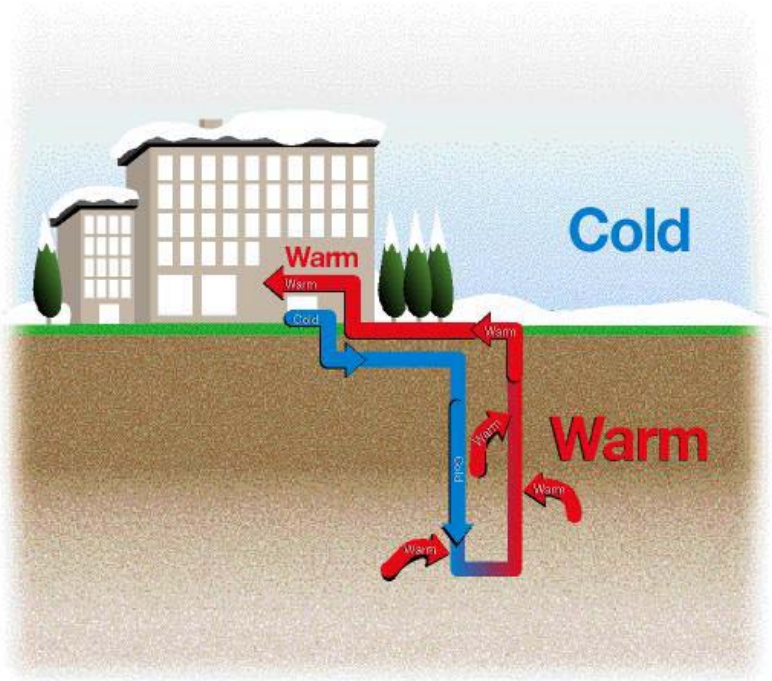

- Uses The Earth As Heat Sink/Source
- Possible Utility Rebates
- Medium To Large Schools

Fancoils

- Good Choice For Large Schools
- Retrofits

Central Systems

Rooftop Units

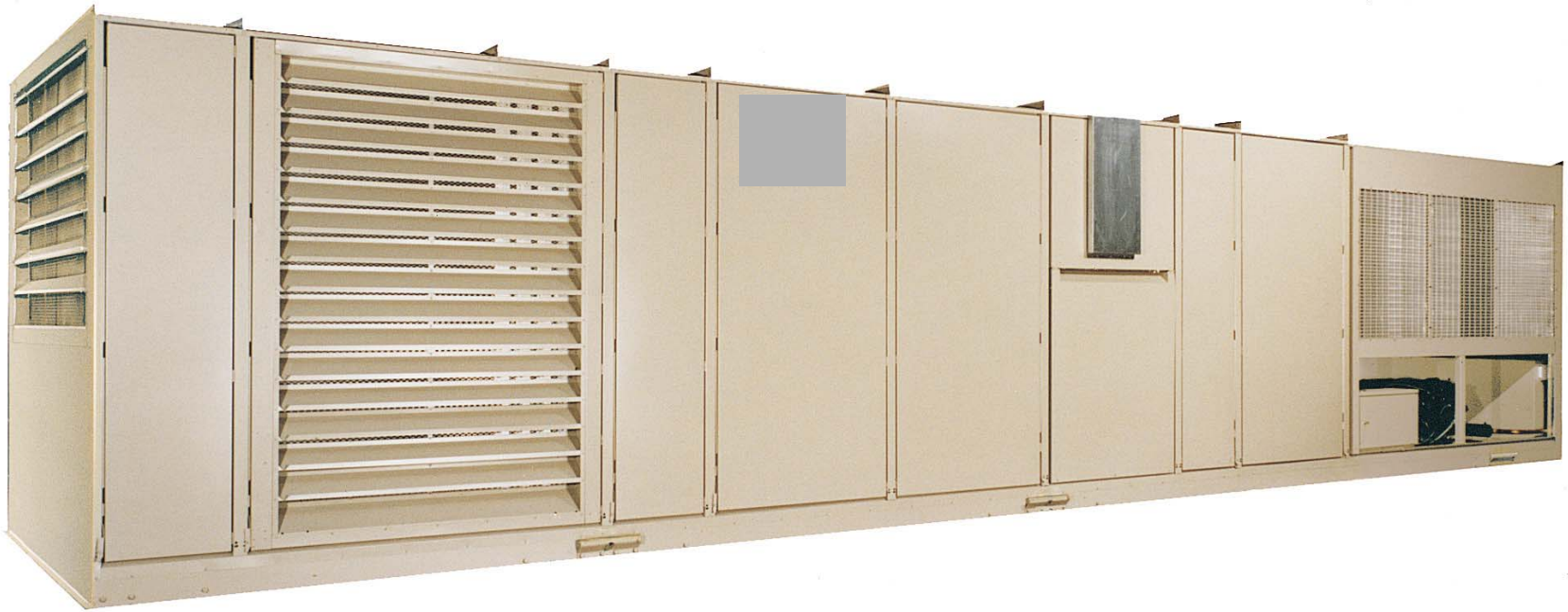

- Unitary And Applied Versions
- Schools Should Only Use Applied

Energy / Enthalpy Recovery Wheels

- Motor Driven Wheel With Desiccant Coating
- Provides Sensible Or Sensible / Latent Recovery Between Exhaust & Supply Airstreams
  - Summer And Winter Potential
  - Capacity Modulated By Wheel Speed Or Bypass
- Leakage Can Lead To Cross-Contamination
- Moving Parts (More Maintenance)

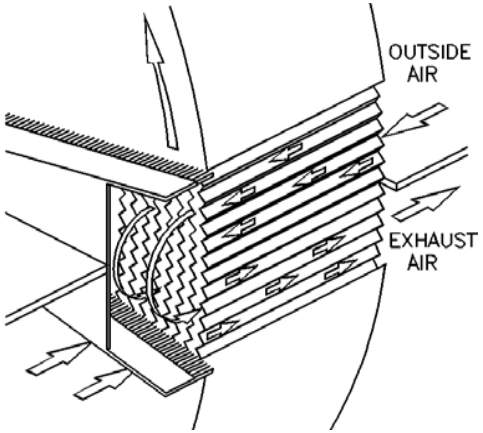

System Economics

Relative Installed Costs

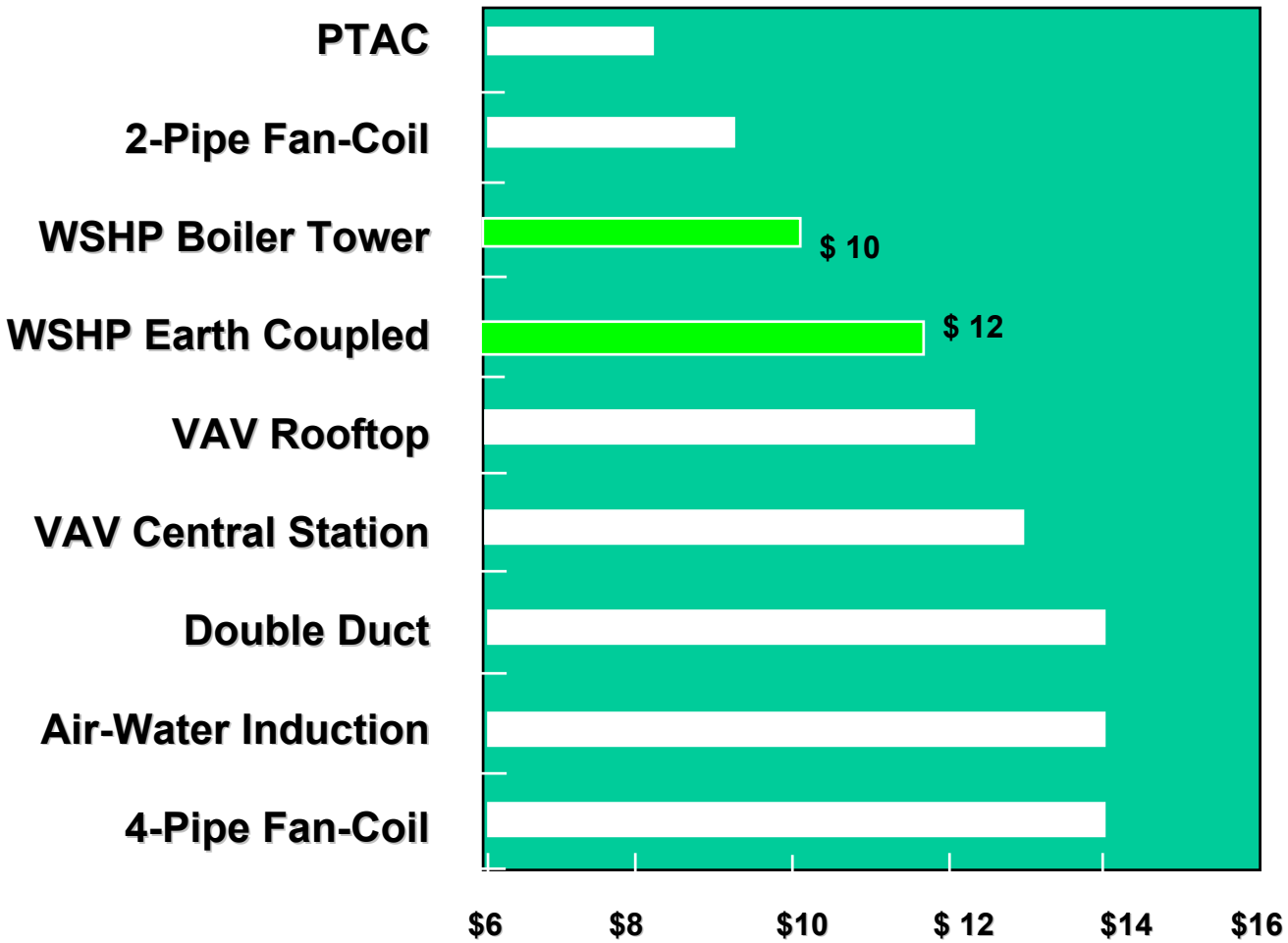

- Dollars / Square Foot *

Relative Operating Costs

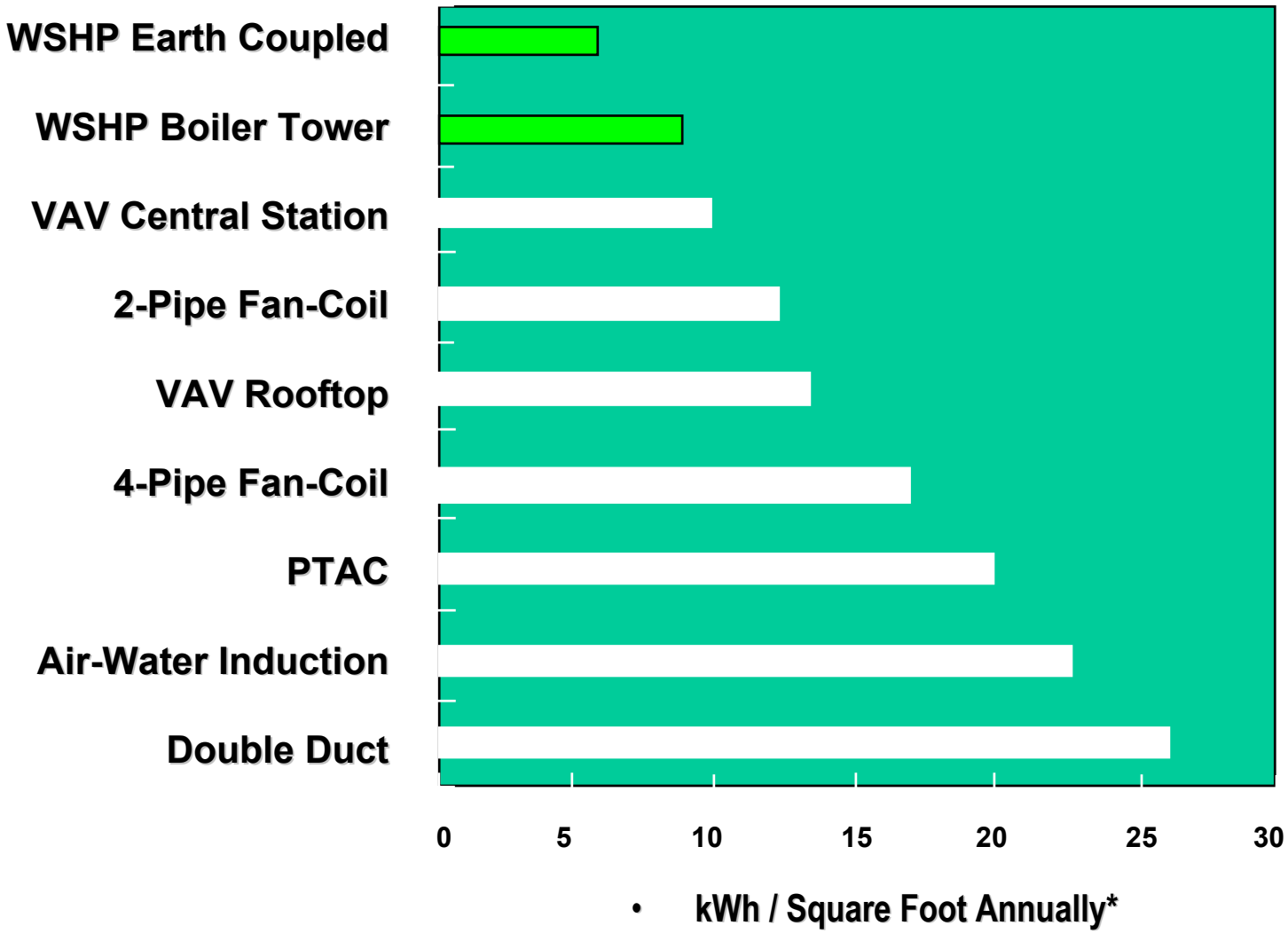

System Economics

- Utility Costs Second Only To Payroll
  - Important To Senior Board Members
  - Day To Day Operators Care More About Serviceability
- Capital Always Hard to Come By
- Decisions Should be Based On Life Cycle Analysis
  - Actually Picked By Engineer Based On What He Has Done Before
- No Way To Provide Absolute Ranking Of Systems
  - Changing Locations Will Change Ranking

Temperate and Mixed Climates

- Evaluate Cooling Equipment Sizes And Models That Best Match Demand Requirements
- Consider Desiccant Dehumidification
- Consider Natural Gas/Solar Driven Absorption Cooling
- Free Cooling For Nighttime Ventilation
- Reduce Use Of CFC and HCFC Refrigerants
- Consider Thermal Storage
- Consider Direct Groundwater Cooling

THANK YOU!

Julian de Bullet
Applications Manager
McQuay International
&
ASHRAE Vice President
(2001-2003)
703-395-5054