# HVAC Systems

## "A New Idea on Heat Recovery"

Tom Durkin, PE
Veazey Parrott Durkin & Shoulders
Indianapolis, Indiana 46240
Phone: (317) 574-5970
tdurkin@vpdsweb.com

A REBUILD AMERICA PARTNER

# Overall Scope and Purpose

The goal of the **"HVAC Best Practices"…overall general guidelines… maximized occupant comfort, indoor air quality, humidity control and energy efficiency.** Starting point from which to begin the process to determine the most appropriate HVAC system for a particular school application, based on the site dynamics and minimized life cycle cost.

# Baseline – Required Elements

Best Practice recommendations must include:

- ASHRAE Standard 62.
- ASHRAE Standard 90.1.
- Summertime humidity analysis.
- Life cycle cost analysis.
- Check, test and start.
- Air balance.

# Recommended Elements

- Hydronic heating… condensing style modular boilers.

  The entire heating system… designed for low temperature water, recommended maximum temperature of 135ºF.

# Winter Savings From Low Temp Boilers

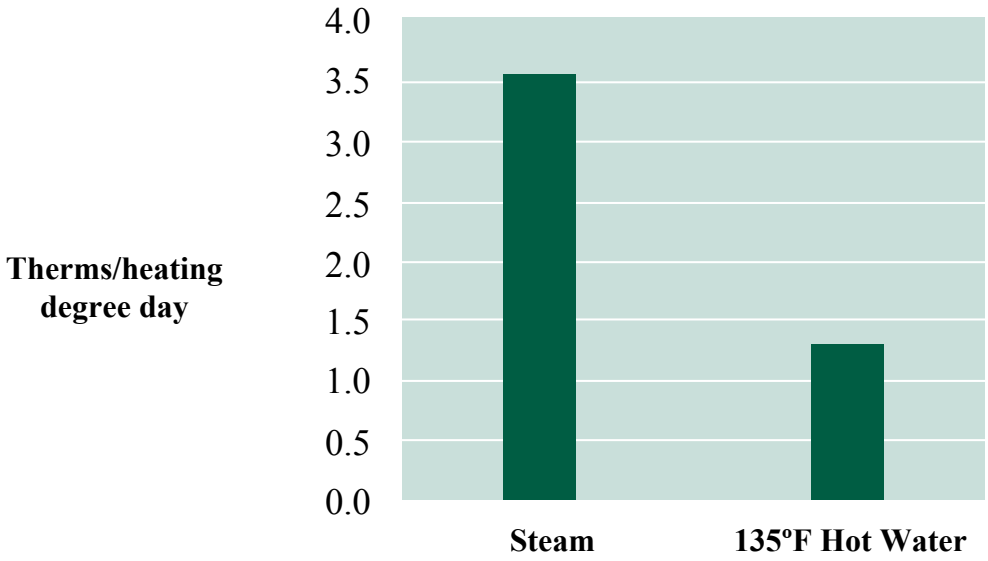

# HVAC BEST PRACTICES

6. Simultaneous operation of boilers and chillers should be avoided, either through system selection or energy recovery devices.

# Reason to Recover Energy

- Model Energy Code

  "...do not reheat with new energy…"

- ASHRAE Std. 90.1 - 2001

  6.3.2.1 prohibits "reheating" and "recooling" except when…

- Cost of Energy
  - Electric = $1.90 per 100 MBH
  - Conventional Boiler = $0.83 per 100 MBH
  - Condensing Boiler = $0.59 per 100 MBH
  - Recovered Heat = $0.09 per 100 MBH or ‹ $0.23 › per 100 MBH

- Can be as much as 10% of Total Energy Bill

# Tom's Rules of Energy Recovery

- Never compromise IAQ, occupant comfort or humidity control.
- Don't spend more to save energy than energy is worth.
- Try to engineer the need for energy recovery out of a project.
- Anything goes.
- BTU's = BTU's.

# A Concurrent Heating/Cooling Load:

One Shower =

4.4 Tons of Cooling

# Engineer Out the Need for Reheating

- Avoid Reheat by:
  - Scheduling through EMS.
  - Occupancy sensors.
  - $CO_2$ sensors.
  - Knowing what your control valves are doing.
  - Resetting LAT.
  - Mechanical System Selection.

# HVAC BEST PRACTICES

8. Heat recovery chillers should be evaluated in all locations that would have either simultaneous heating/cooling or large domestic hot water requirements when cooling is on.

# A Concurrent Heating/Cooling Load:

**Scenario 1**

Chiller Cooling = 0.6 kw/Ton @ $0.055/kwh
= $0.28/100 BTU

Boiler Heating = $0.50 THERM Natural Gas @ 85% Efficiency
= $0.59/100 BTU

Total = $0.87

# A Concurrent Heating/Cooling Load:

**Scenario 2**

Economizer Cooling = Free (outside air)

Boiler Heating = $0.50 THERM Natural Gas @ 85% Efficiency
= $0.59/100 BTU

Total = $0.59

# A Concurrent Heating/Cooling Load:

**Scenario 3**

HR Chiller Cooling = @0.75 kw/Ton @ $0.055/kwh
= $0.34/100 BTU

HR Chiller Heating = Free (rejected condenser heat)

Total = $0.34

# A Concurrent Heating/Cooling Load:

| **Totals** | |
|---|---|
| Scenario 1 = $0.87 | = $0.54 |
| Scenario 2 = $0.59 | = $0.36 |
| Scenario 3 = $0.34 (Cheap Energy) | = $0.22 (Real Cheap Energy) |

# Water – to – Water

## "Dedicated Heat Recovery Chillers" (DHRC)

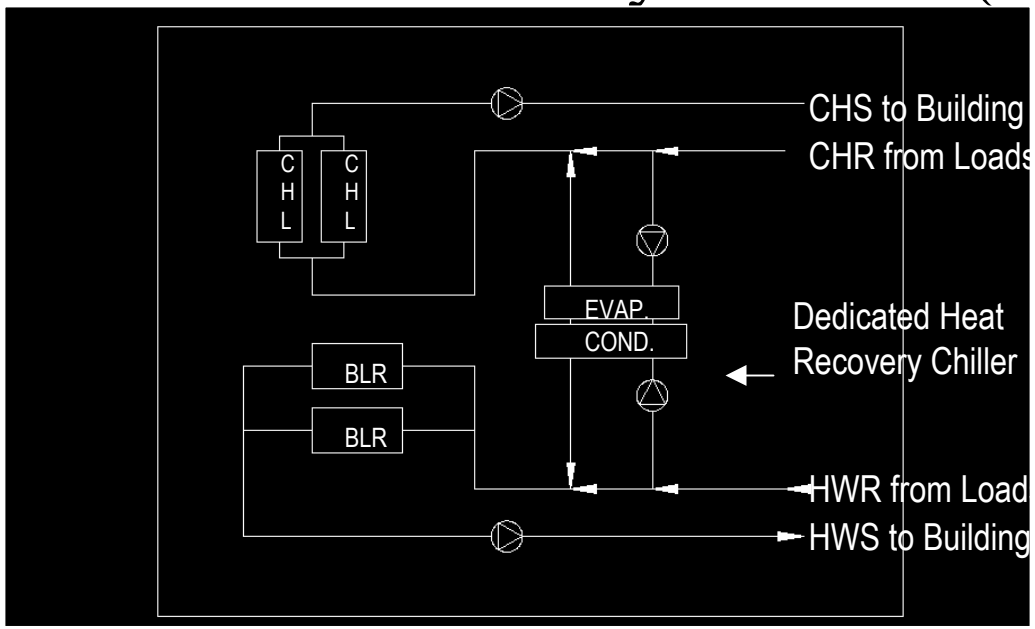


Advantages

- Boilers don't run in summer.
- 100% efficient.
- Perfect compliment for low-temp heat.

4. Easy retrofit into existing systems.

Disadvantages

1. Heating plant should be designed for low temp water.
2. Easy to Value Engineer out of project.

# DHRC Proper Sizing = The Larger of:

1. Summertime reheat plus domestic water plus pool water.

OR

2. Wintertime chiller demand.

# Maximize the Investment

- Run as many hours as possible.
- What's the chilled water Delta-T?
- Don't over ventilate in winter.
  ("Free Cooling" isn't really free)
- Domestic hot water.
- Swimming pool.

# DHRC Efficiency

Dependent on temperature of:

1. Condenser water (cooler is better).

AND

2. Evaporator water (warmer is better).

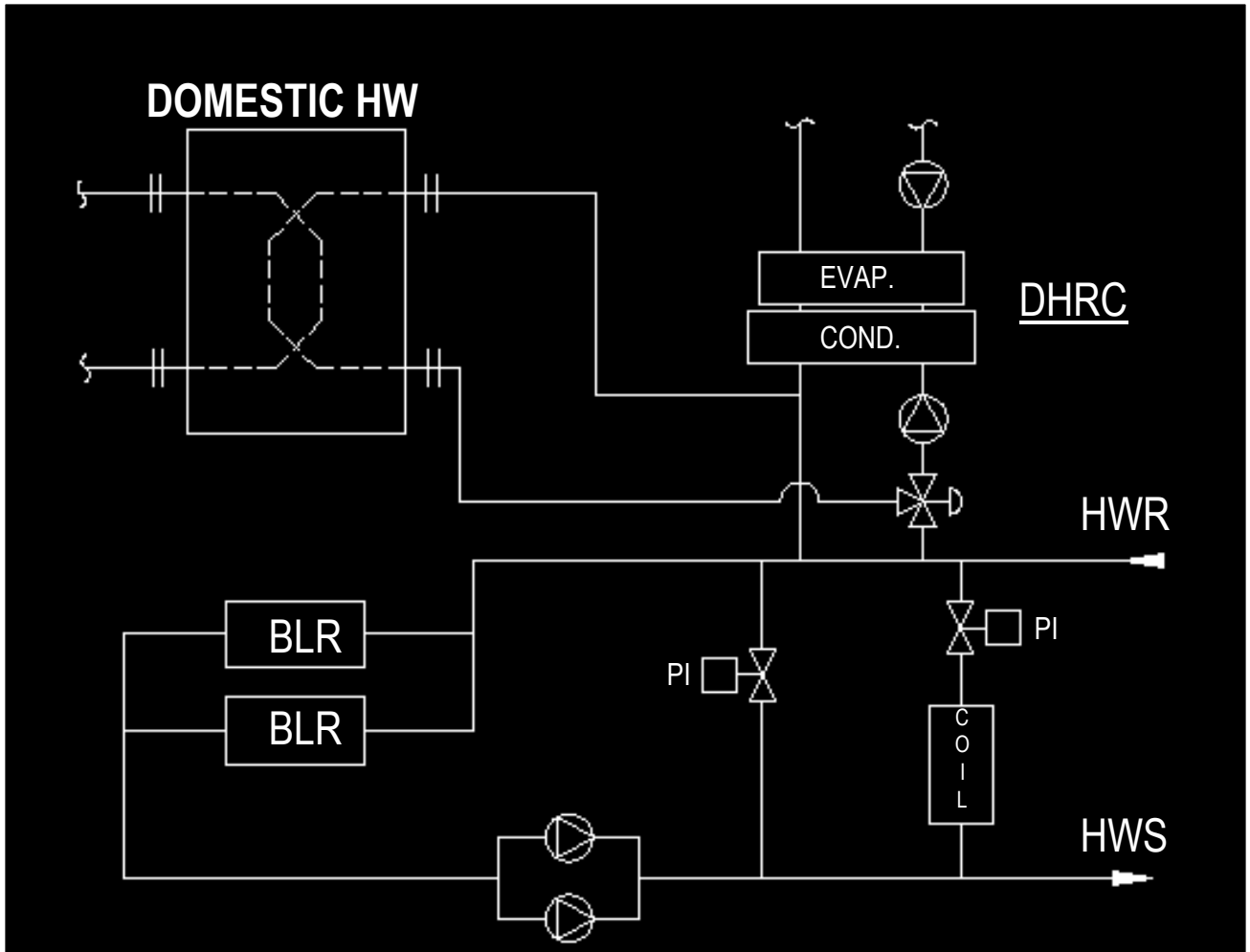


V.S. PRIMARY PUMPED HOT WATER CIRCUIT

# HVAC BEST PRACTICES

9. Indoor swimming pools shall include dehumidification systems and energy and water recovery schemes.

# Indoor Swimming Pools

## Options for ENERGY Smart Operation

- Dehumidifying Heat Pump
  - Recycles all energy.
  - High first cost (equipment and space).
  - High maintenance.
  - Additional heat rejection required.
- DHRC
  - Same energy profile.
  - Lower first cost.
  - Lower maintenance cost.
  - No additional heat rejection.
  - “Whole building” energy recovery vs. “pool” energy recovery.

# Control Challenges

- DHRC must decide to operate in winter mode or summer mode.
- DHRC must be able to handle variations in condenser water from 120ºF to 55ºF.
- Boilers and water heaters must be coordinated with DHRC so that there is a place to reject the heat.
- AHU economizer interlock must be coordinated for wintertime operation.

# A Chiller Retro-Fit

| Chiller Plant Conventional | | With DHRC | |
|---|---|---|---|
| Chiller size | 2 @ 375T | Chiller size | 2 @ 325 plus DHRC @ 100T |
| CHL | $445,000 | CHL | $432,000 |
| Cont. | $178,000 | Cont. | $219,000 |
| | | Add'l Piping | $6,200 |
| | | DHRC | $85,000 |
| | $623,000 | | $742,000 |

(½ %)

**$26,000/yr (summer gas bill)**

**4.6 yr payback**

Pool Dehumidifier

$135,000

$758,000

HW/CHW AHU

$40,000

$782,000

# Implementation on a College Campus

**Base Case**

- Steam from Campus Loop
  - Duplex steam to water heat exchangers, circulate 180ºF HW.

- Chilled Water from Campus Loop
  - Primary/Secondary bridge.

# DHRC at a Dorm

- No Steam Connection Required
  - If sized for heating.
  - If campus has constant winter cooling demand.

- CHW Connection Required.
  - Downsized.
  - Local cooling tower may be required.

# Barriers Identified to Best Practices

- An overall reluctance to change.
- The perception that utilizing high-performance HVAC equipment and sources increases initial costs.
- Retrofit opportunities are often postponed due to up-front cost.
- Expectations are often unrealistic.
- The demands for verification can be unrealistic.
- Standard practices are not questioned or reevaluated in light of new technologies.
- Perceived or actual liability.
- Codes and standards may discourage innovative solutions.
- Poor rating systems (e.g. boilers) may obscure actual efficiency differences.

Tom Durkin, PE
Veazey Parrott Durkin & Shoulders
8425 Woodfield Crossing Blvd, Suite 155E
Indianapolis, Indiana 46240
Phone: (317) 574-5970
tdurkin@vpdsweb.com