Building Envelope

Nolan Day
WR Meadows

Overview

Cross-cutting Issues Related to Building Envelope

	Goals/Cross-Cutting Issues									
	Health and IAQ	Thermal Comfort	Visual Comfort	Acoustic Comfort	Security and Safety	Ecosystem Protection	Energy Efficiency	Water Efficiency	Materials Efficiency	Building as a Teaching Tool
Energy-Efficient Building Shell		●		●			●		●	●

Heat Transfer through Building Envelope

- U-factor
- R-values
- Thermal Mass
- Heat Capacity

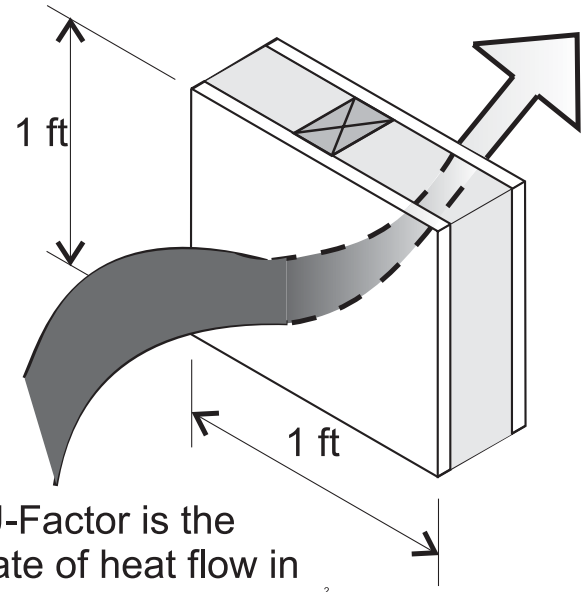

U-Factor is the rate of heat flow in Btu/h through one ft^2 area when one side is 1° F warmer

Heat Transfer through Building Envelope

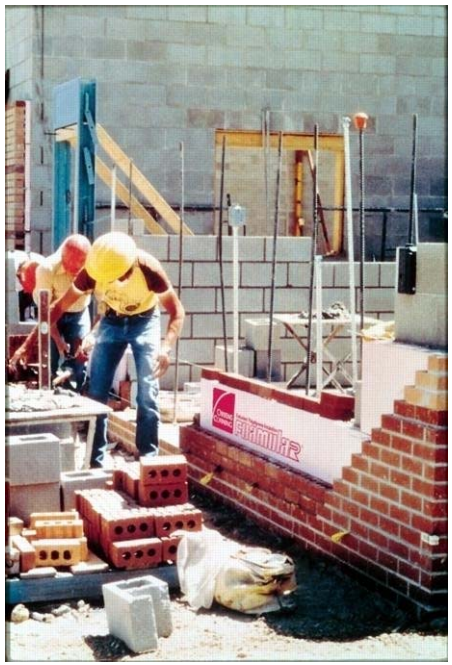

Heat Transfer through Building Envelope

- U-factor
- R-values
- Thermal Mass
- Heat Capacity

Heat Transfer through Building Envelope

Heat Transfer through Building Envelope

- U-factor
- R-values
- Thermal Mass
- Heat Capacity

Heat Transfer through Building Envelope

- U-factor
- R-values
- Thermal Mass
- Heat Capacity

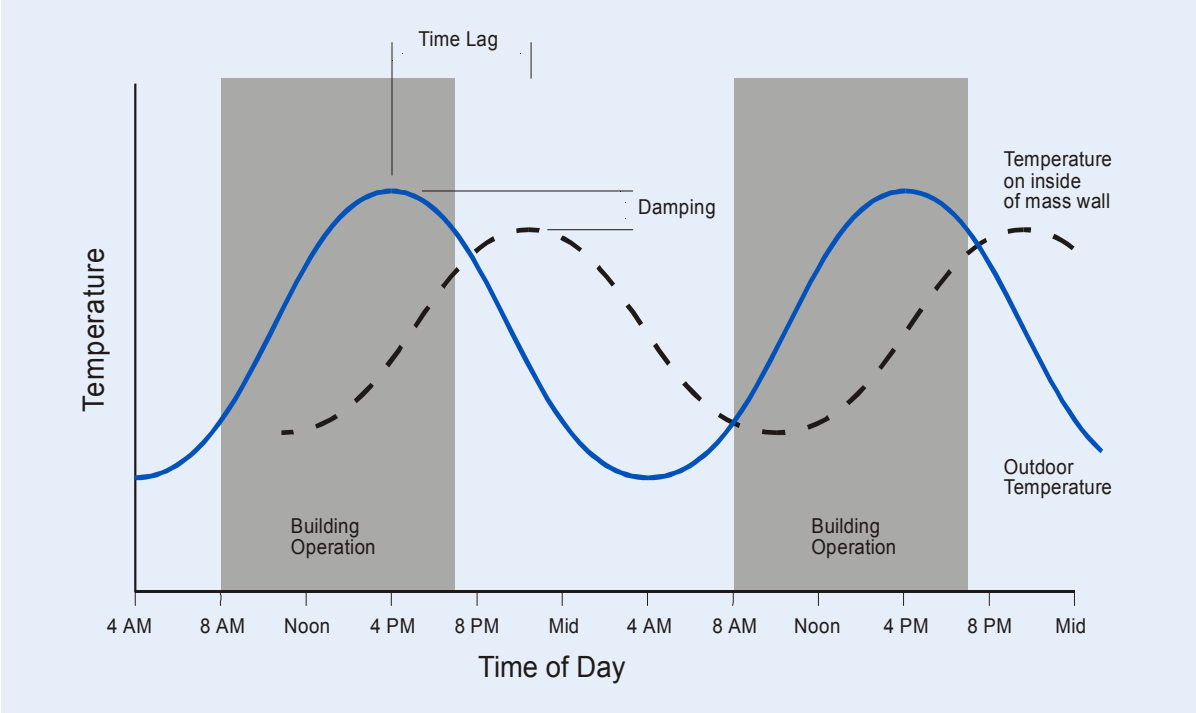

Heat Transfer through Building Envelope

Heat Transfer through Building Envelope

- U-factor
- R-values
- Thermal Mass
- Heat Capacity

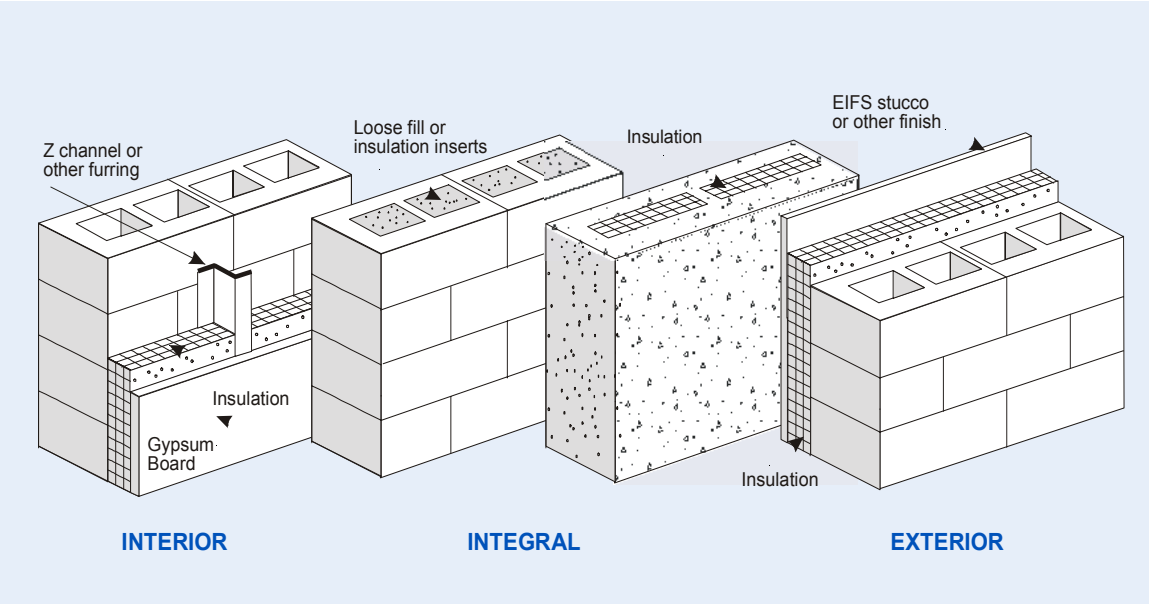

Minimum R-values from ASHRAE 90.1

	Climate Region						
	Hot and Dry (Phoenix)	Hot and Humid (Orlando)	Temperate and Humid (Atlanta)	Temperate Mixed (Seattle)	Cool and Humid (Boston)	Cool and Dry (Denver)	Cold and Humid (Minneapolis)
Roofs							
Insulation Entirely above Deck	R-15 ci	R-15 ci	R-15 ci	R-15 ci	R-15 ci	R-15 ci	R-15 ci
Attic and Other	R-30	R-30	R-30	R-30	R-30	R-30	R-38
Walls, Above Grade							
Mass	NR	NR	R-5.7 ci	R-5.7 ci	R-7.6 ci	R-7.6 ci	R-9.5 ci
Steel Framed	R-13	R-13	R-13	R-13	R-13+3.8 ci	R-13+3.8 ci	R-13+3.8 ci
Wood Framed and Other	R-13	R-13	R-13	R-13	R-13	R-13	R-13
Wall, Below Grade							
Below Grade Wall	NR	NR	NR	NR	NR	NR	NR
Floors							
Mass	R-4.2 ci	R-4.2 ci	R-6.3 ci	R-6.3 ci	R-8.3 ci	R-8.3 ci	R-8.3 ci
Steel Joist	R-19	R-19	R-19	R-19	R-19	R-19	R-30
Wood Framed and Other	R-19	R-19	R-19	R-19	R-30	R-30	R-30
Slab-On-Grade Floors							
Unheated	NR	NR	NR	NR	NR	NR	NR
Heated	R-7.5@12 in.	R-7.5@12 in.	R-7.5@12 in.	R-7.5@24 in.	R-10@36 in.	R-10@36 in.	R-10@36 in.

Note: “ci” means continuous insulation. “NR” means no requirement.

Recommended R-values for schools

	Climate Region						
	Hot and Dry (Phoenix)	Hot and Humid (Orlando)	Temperate and Humid (Atlanta)	Temperate Mixed (Seattle)	Cool and Humid (Boston)	Cool and Dry (Denver)	Cold and Humid (Minneapolis)
Roofs							
Insulation Entirely above Deck	R-20 ci	R-20 ci	R-20 ci	R-20 ci	R-20 ci	R-20 ci	R-20 ci
Attic and Other	R-38	R-38	R-38	R-38	R-38	R-38	R-60
Walls, Above Grade							
Mass	R-7.6 ci	R-7.6 ci	R-9.5 ci	R-11.4 ci	R-13.3 ci	R-13.3 ci	R-15.2 ci
Steel Framed	R-13+3.8 ci	R-13+3.8 ci	R-13+7.5 ci	R-13+7.5 ci	R-13+7.5 ci	R-13+7.5 ci	R-13+7.5 ci
Wood Framed and Other	R-13	R-13	R-13	R-13	R-13+7.5 ci	R-13+7.5 ci	R-13+7.5 ci
Wall, Below Grade							
Below Grade Wall	NR	NR	NR	R-7.5 ci	R-7.5 ci	R-7.5 ci	R-7.5 ci
Floors							
Mass	R-8.3 ci	R-8.3 ci	R-8.3 ci	R-10.4 ci	R-12.5 ci	R-12.5 ci	R-14.6 ci
Steel Joist	R-30	R-30	R-30	R-30	R-30	R-30	R-38
Wood Framed and Other	R-30	R-30	R-30	R-30	R-30	R-30	R-30
Slab-On-Grade Floors							
Unheated	NR	NR	NR	NR	R-10@24 in.	R-10@24 in.	R-15@24 in.
Heated	R-7.5@12 in.	R-7.5@12 in.	R-10@36 in.	R-10@36 in.	R-10	R-10	R-15

Note: “ci” means continuous insulation. “NR” means no requirement.

Measuring Thermal Performance

- Calculation Methods
  - Series
  - Parallel Path
  - Effective R-value
  - Two-dimensional
  - Testing
- Computer Programs
- Pre-calculated Data

Moisture Control

- Vapor migration occurs from the warm humid side to the cool dry side of the construction where it can condense and lead to mold growth.
- Install vapor barriers on the warm, moist side of framed walls, doors and roofs:
  - Outside of the assembly in humid climates.
  - Inside the assembly for non-humid climates.
- Provide adequate ventilation in attics, crawl space, wall cavities (only in extreme climates).

Air Infiltration

Strategies for reducing infiltration:

- Continuous air barrier on roof and walls.
- Windows/doors with low rates of infiltration.
- Weatherstripping.
- Using air lock entries in cold climates.

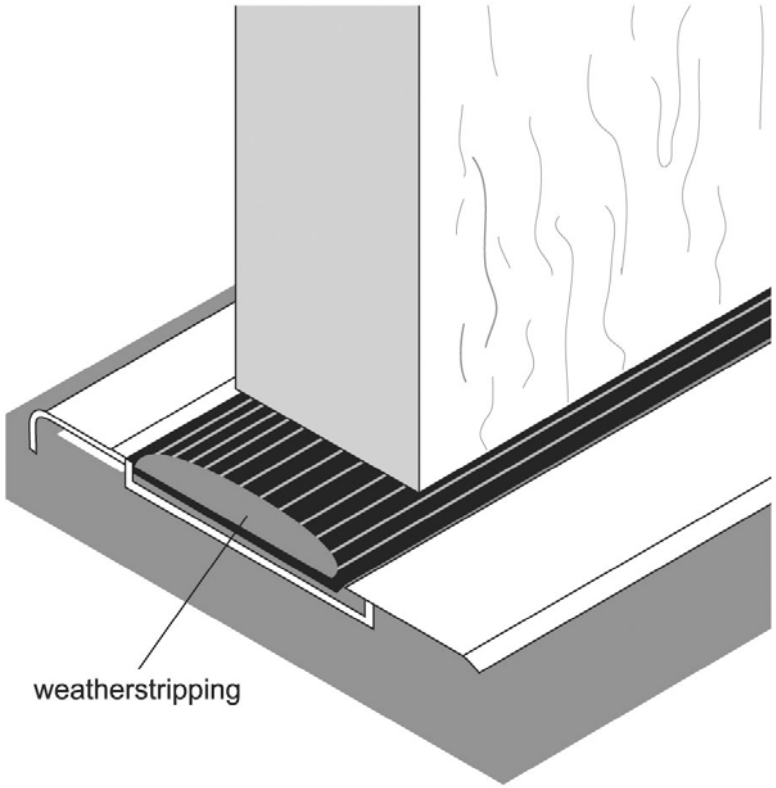

Air Infiltration

- Vestibule doors should be at least 7 feet from the school's main entrance.
- Vestibule doors should have self-closing devices.

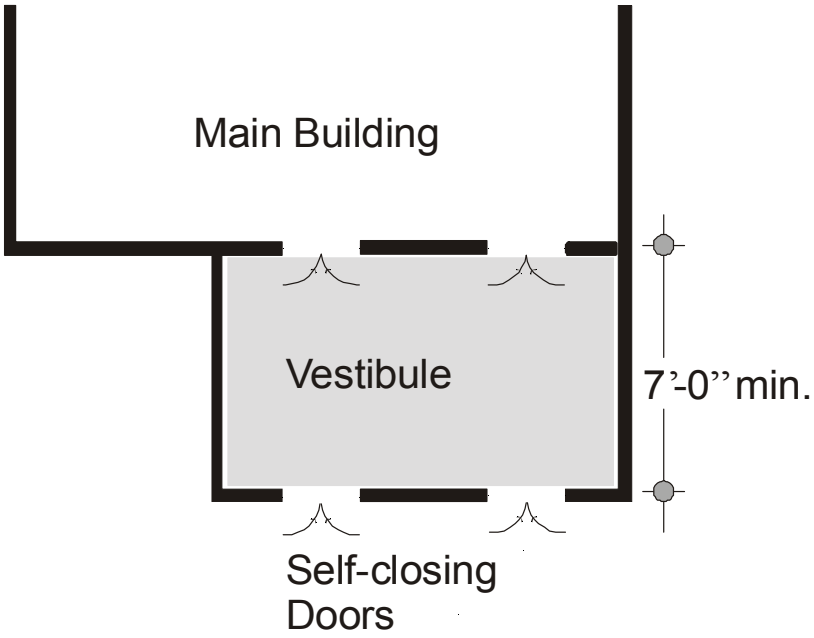

Insulation Recommendations – Wood Framed Walls

- Install a minimum of R-13 cavity insulation in all climates.
- In the Cool and Humid, Cold and Humid, and Cool and Dry climates, also install R-7.5 insulating sheathing.

Insulation Recommendations – Metal-Framed Walls

- Install a minimum of R-13 cavity insulation in all climates.
- In the Hot and Humid and Hot and Dry climates, also install R-3.8 continuous insulating sheathing. In the other climates, use R-7.5 continuous insulating sheathing.

Insulation Recommendations – Mass Walls

- Install R-7.6 continuous insulation in the Hot and Dry and Hot and Humid climates.
- Upgrade this to R-9.5 in the Temperate and Humid climate, to R-13.3 in the Cool and Humid and Cool and Dry climates, and to R-15.2 in the Cold and Humid climate.
- Higher levels of insulation may be appropriate depending on local climate.

Insulation Recommendations – Mass Walls

Complete System

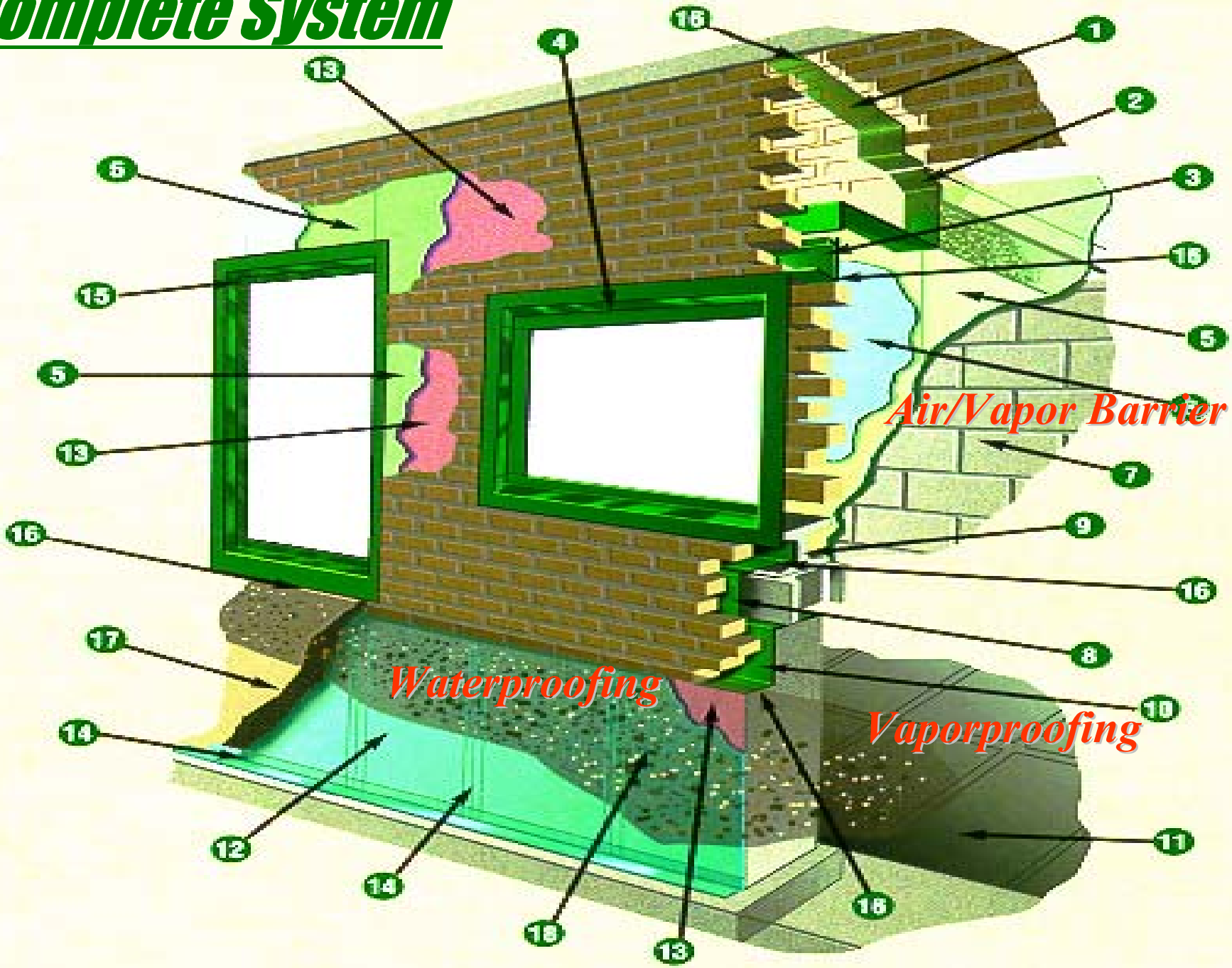

THE HYDROLOGIC CYCLE AND MOISTURE MIGRATION

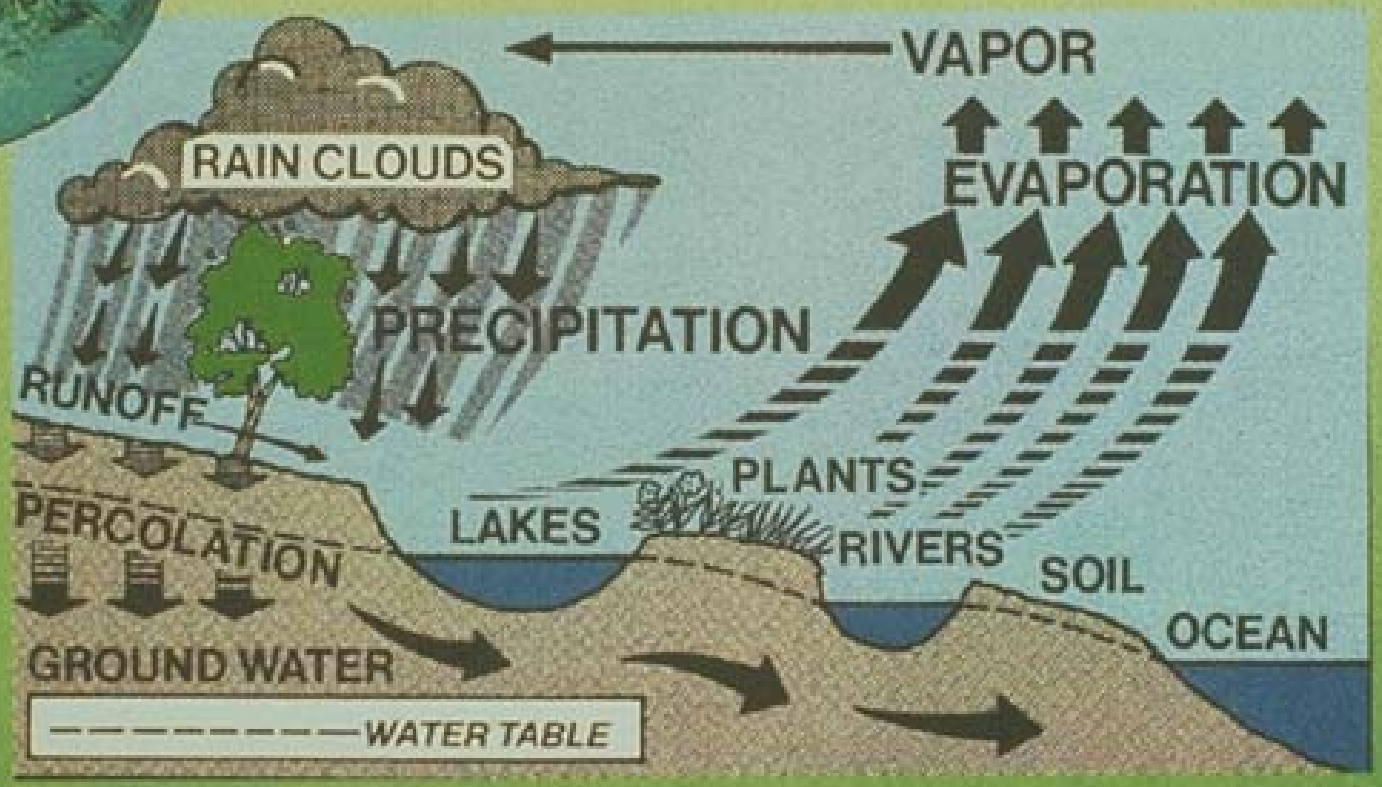

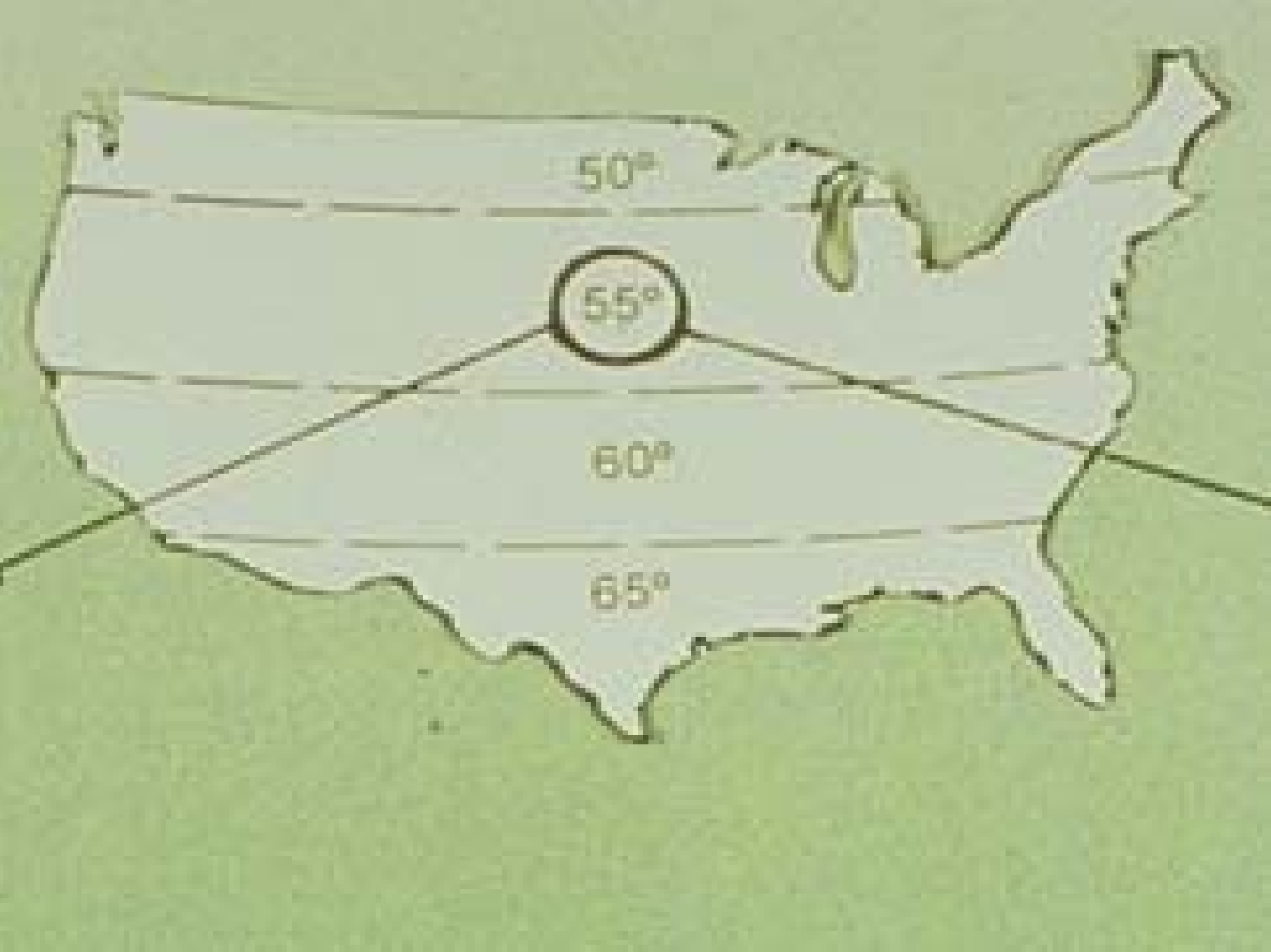
50°
55°
60°
65°

LAWS OF PHYSICS

VAPOR PRESSURE,
as a Function of Temperature & Relative Humidity

TEMPERATURE	RELATIVE HUMIDITY 100	90	80	70	60	50	40	30	20	10
100	.948	.854	.758	.663	.569	.474	.379	.284	.189	.095
90	.639	.621	.551	.482	.414	.344	.275	.209	.138	.069
80	.506	.455	.405	.357	.303	.253	.202	.152	.101	.051
75	.429	.386	.343	.300	.258	.214	.172	.129	.086	.043
70	.362	.326	.290	.253	.217	.181	.145	.108	.072	.036
65	.305	.274	.244	.213	.183	.152	.122	.091	.061	.030
60	.256	.230	.205	.179	.153	.128	.102	.077	.051	.026
55	.214	.192	.171	.149	.128	.107	.085	.064	.042	.021
50	.178	.160	.142	.124	.107	.089	.071	.053	.036	.018

The above table was created by General Electric in

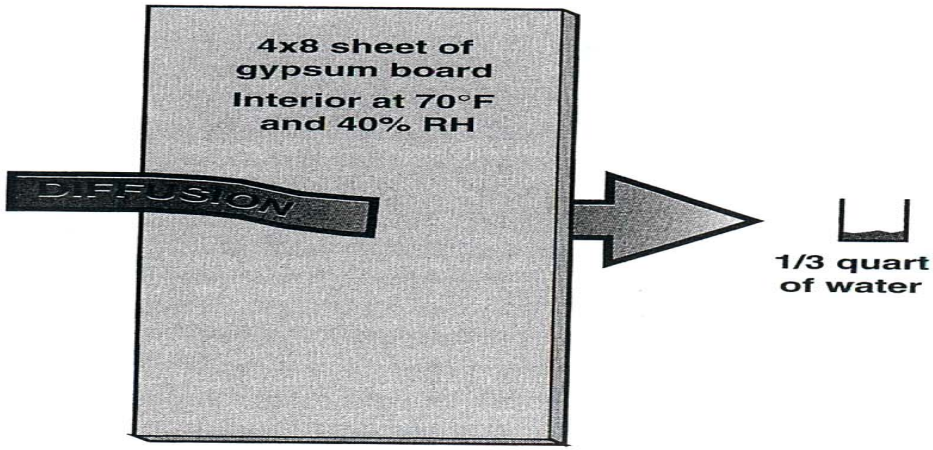
4x8 sheet of
gypsum board
Interior at 70°F
and 40% RH
DIFFUSION
1/3 quart
of water

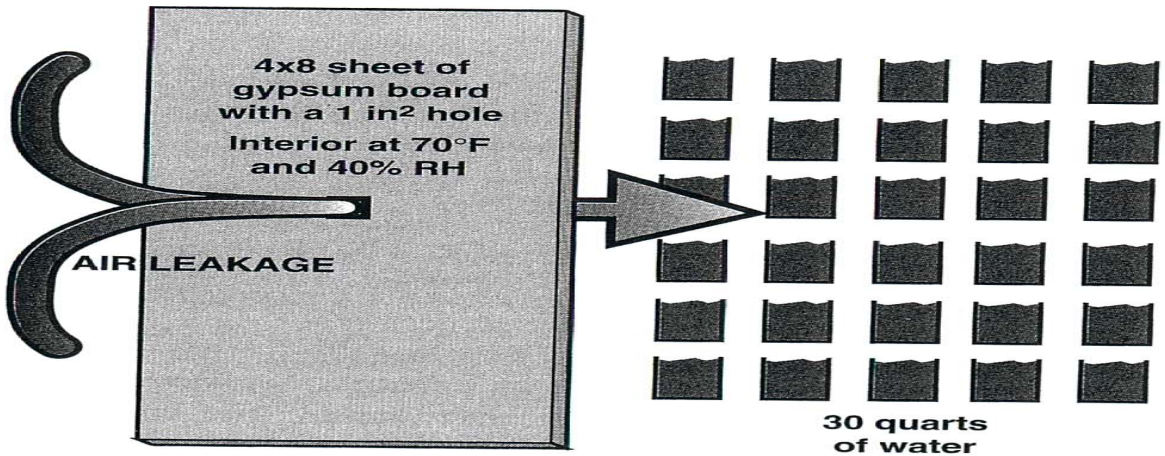
4x8 sheet of
gypsum board
with a 1 in² hole
Interior at 70°F
and 40% RH
AIR LEAKAGE
30 quarts
of water

Pressures

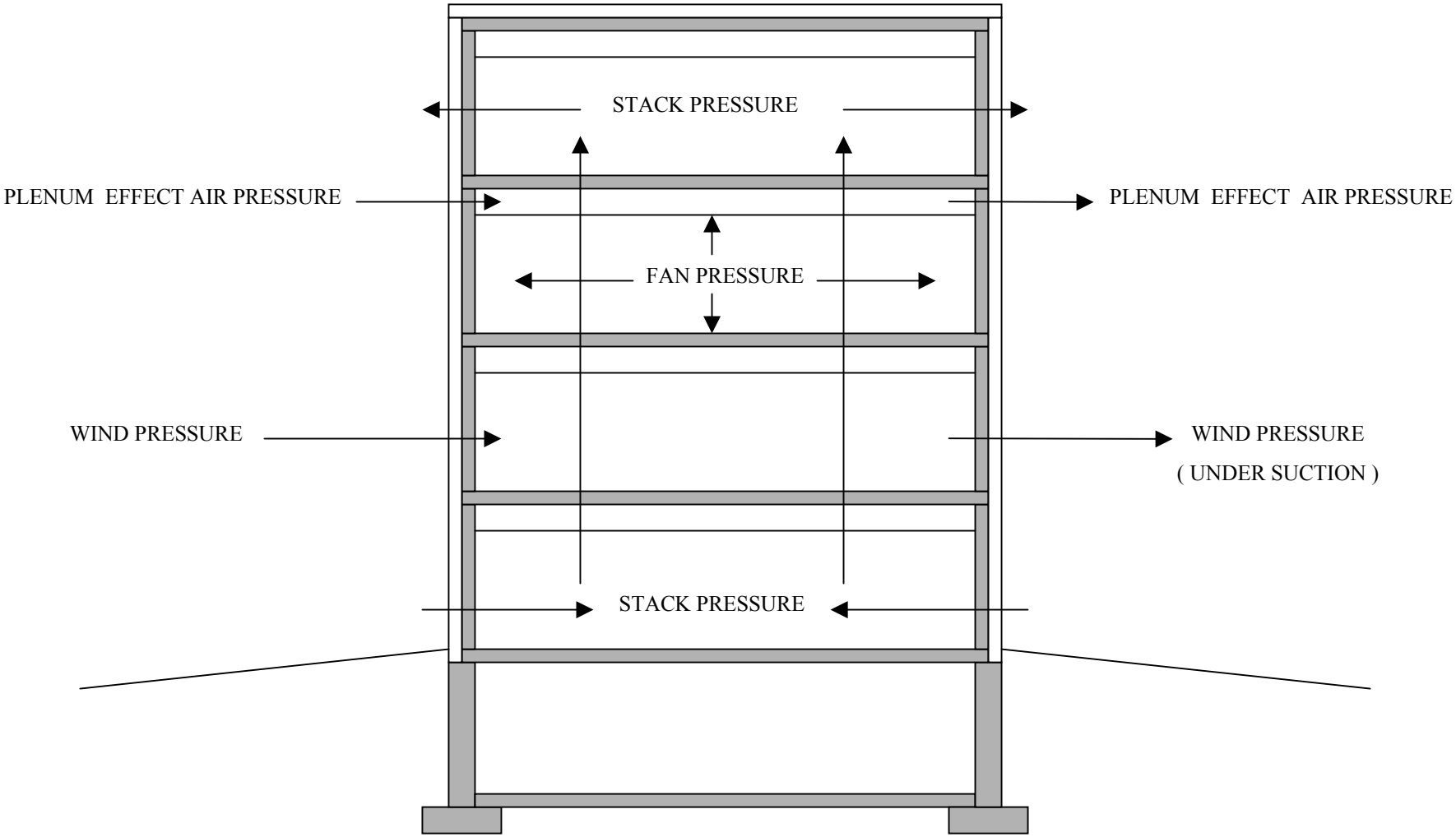
STACK PRESSURE
PLENUM EFFECT AIR PRESSURE
PLENUM EFFECT AIR PRESSURE
FAN PRESSURE
WIND PRESSURE
WIND PRESSURE
(UNDER SUCTION)
STACK PRESSURE

Example of what can happen when air flow relocates a building envelope system's dew point into the veneer layer.

Air And Vapor Barriers

Metal
Glass
Modified bituminous self adhering membrane
Modified bituminous torch grade membrane
Foil back urethane insulation: 1” or thicker
Foil back gypsum board: 1/2” or thicker
Certain asphalt impregnated fiber board
Certain fluid applied membranes
Sealants (Caulking)
Plastic
Certain trowel applied modified asphalt emulsions
Certain urethane insulation materials
Certain foam insulation

Air Barriers

Plywood sheathing: 3/8” or thicker
Smooth surface roofing membrane
Cement board: 1/2” or thicker

Extruded Polystyrene: 1 1/2” or thicker
Gypsum board (Use moisture resistant board)
Concrete
Phenolic insulation board: 15/16” or thicker

Materials that do not meet the requirements to be an Air Barrier

Plywood sheathing: Less than 3/8" thick

Reinforced non perforated polyolefin

Tempered hardboard

Asphalt saturated felt paper: 15# and 30#

Plain fiberboard

Spunbonded olefin film

Vermiculite insulation

Concrete masonry units

Flakewood board

Particle board

Expanded polystyrene

Glass fiber rigid insulation board

Asphalt impregnated fiberboard

Glasswool insulation

Cellulose insulation

Brick

Wall order of assembly

- Air barriers must be installed on the warm side of the insulation. This way, any moisture that forms will occur on the outside of the air barrier. The moisture will be reabsorbed into the exterior atmosphere or drained away through flashings and /or floor slabs.

- Thermal insulation must be in direct contact with air barrier membrane, installed tight. Direct contact between insulation and the air barrier prevents the generations of convective air currents that can lead to water vapor and condensation problems.

Wall order of assembly

- In hot and humid, air flow retarders should be installed on the exterior of the building, and building assemblies should protect the outside wall surface from getting wet. Any moisture should be allowed to drain away or dry toward the interior, using permeable interior wall finishes and avoiding wall coverings.

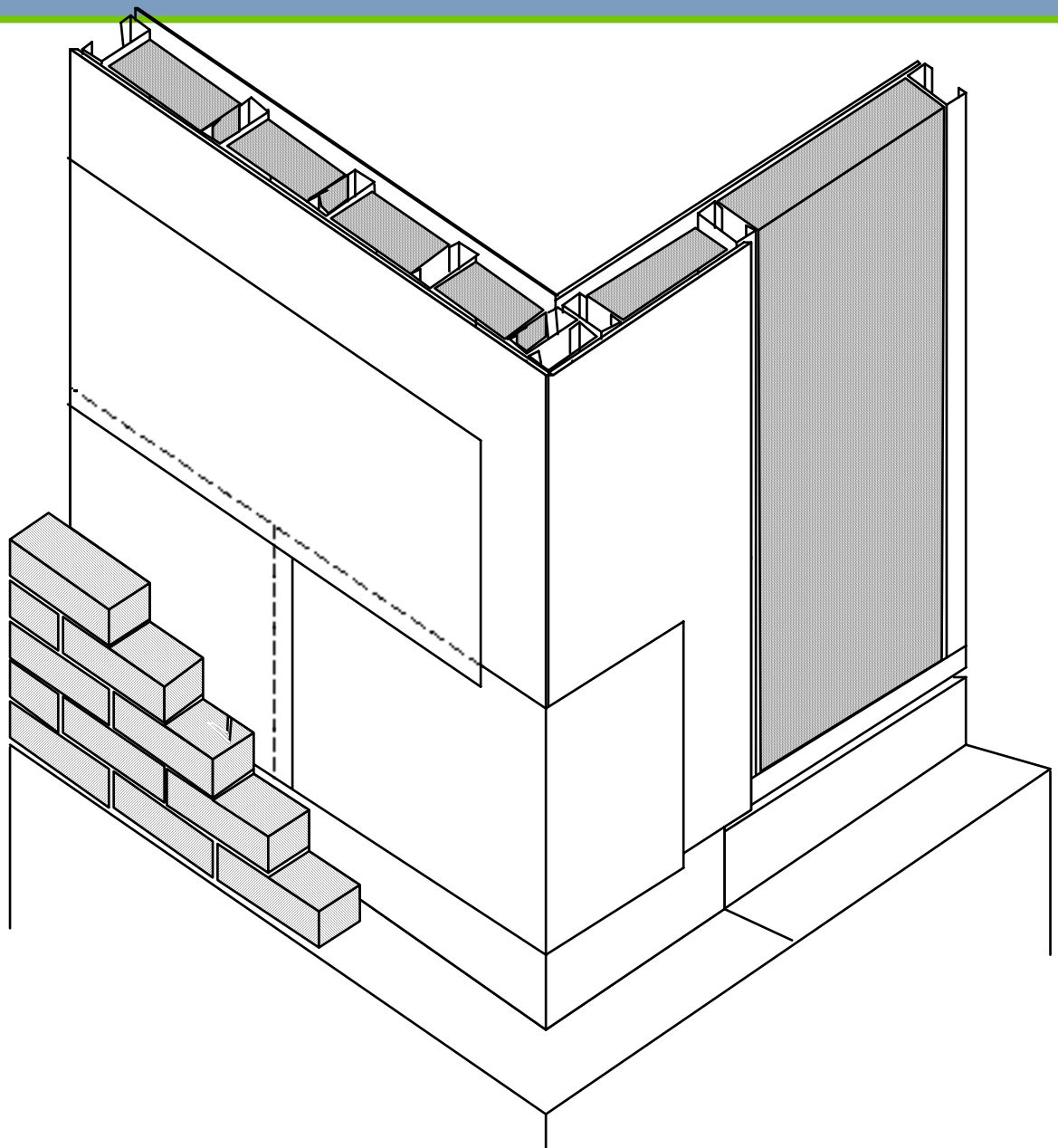

AIR AND VAPOR BARRIER SYSTEM

FACE BRICK

CAVITY

AIR FLOW RETARDER

GYPSUM WALL BOARD

LIGHT GAGE METAL FRAMING BACK UP WITH FIBERGLASS BATTS INSULATION BETWEEN STUDS

INTERIOR GYPSUM WALL BOARD

WARM CLIMATE

Problems Related To Slab Moisture

DUSTING - water trowled into surface

SCALING - high permeability in surface

BLISTERING - premature finishing discolor

CURLING - differential drying/curing

CRACKING - excess water & evaporation

Subgrade preparation

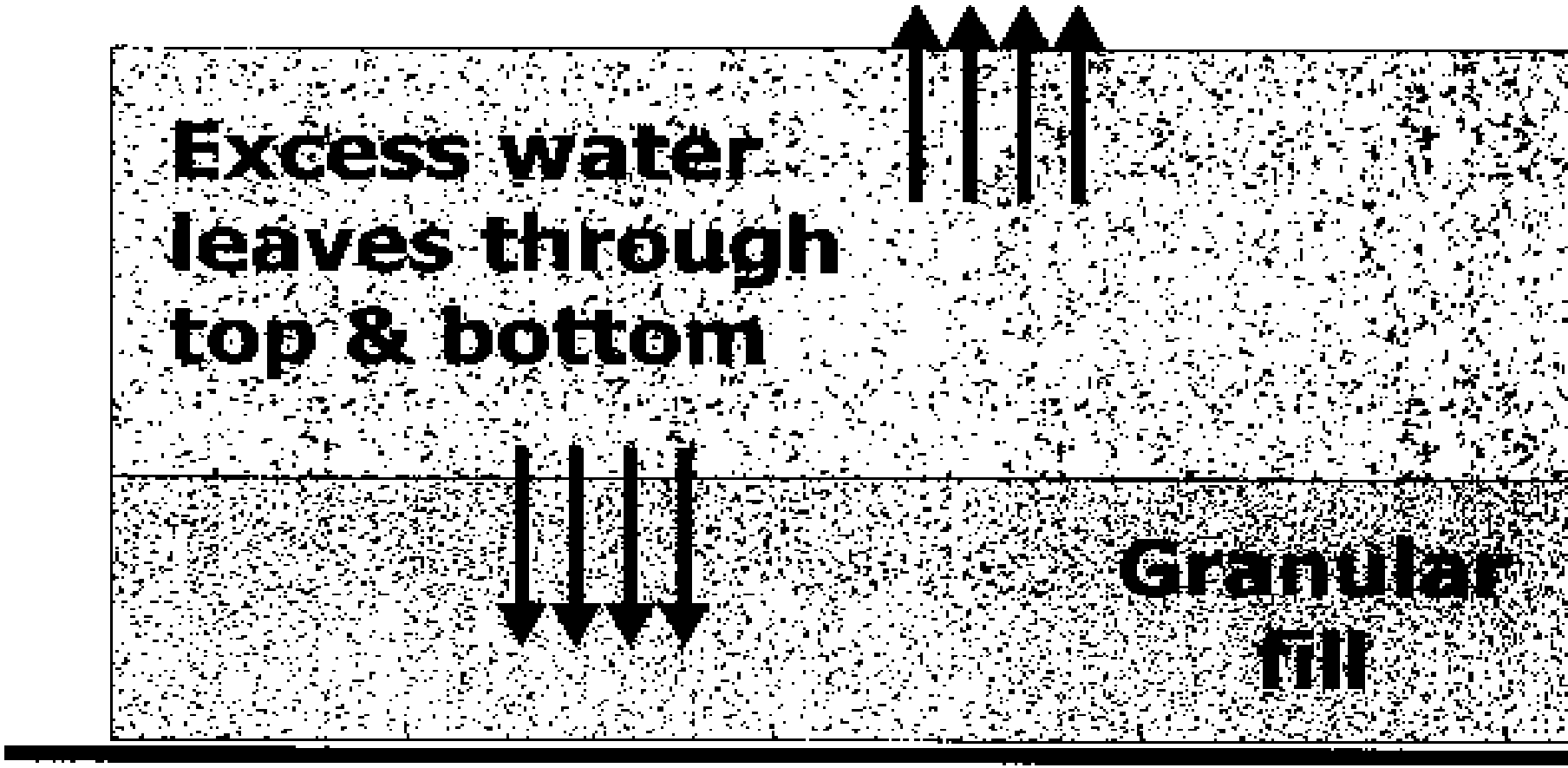

Subgrade preparation

Excess water can't leave through bottom of slab

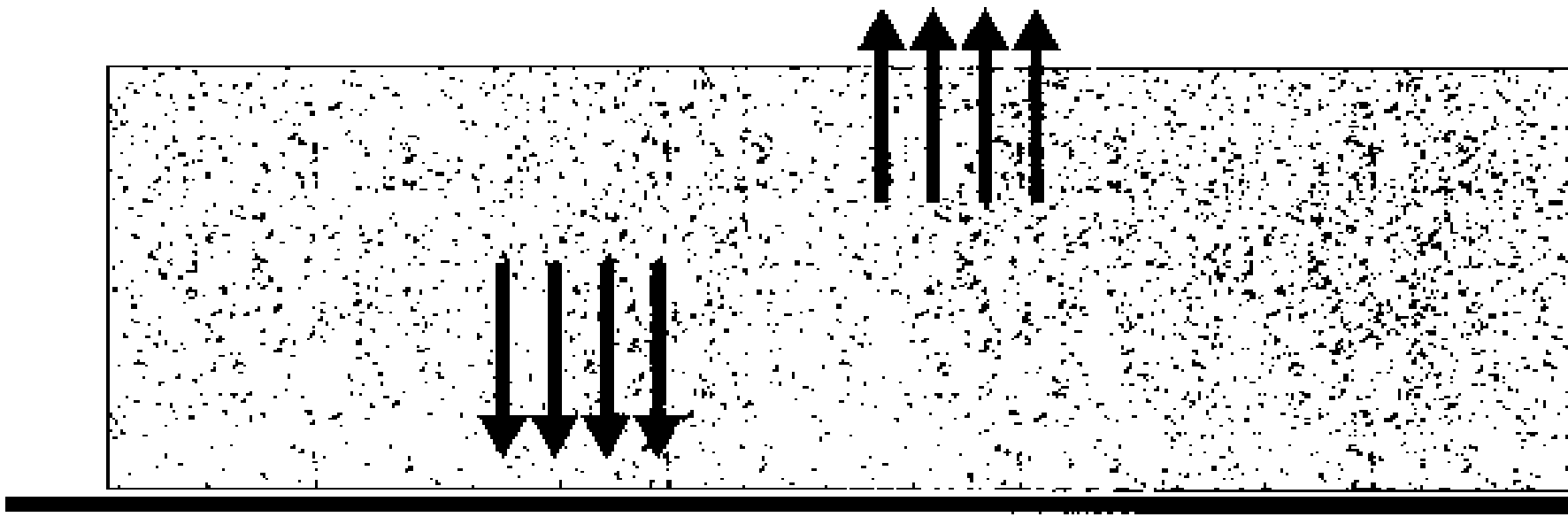

Vapor barrier under slab

Water cure can lead to:

Slab Curl

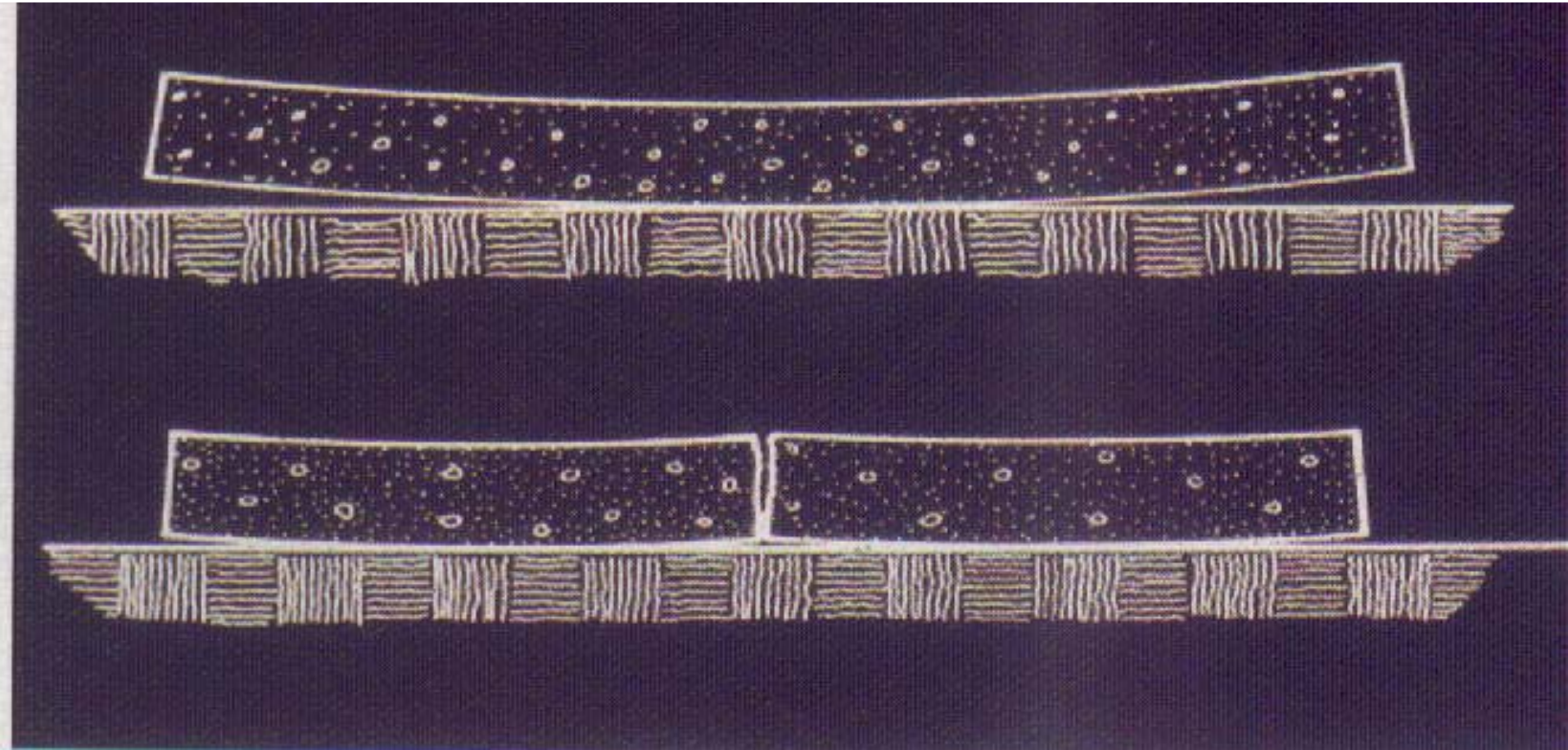

SPORT FLOORS, INC.

Sport-Flor

THE PRACTICAL SPORTS FLOOR

AGA

HARD MAPLE FLOORING SYSTEMS

Robbins INC. Sports Surfaces

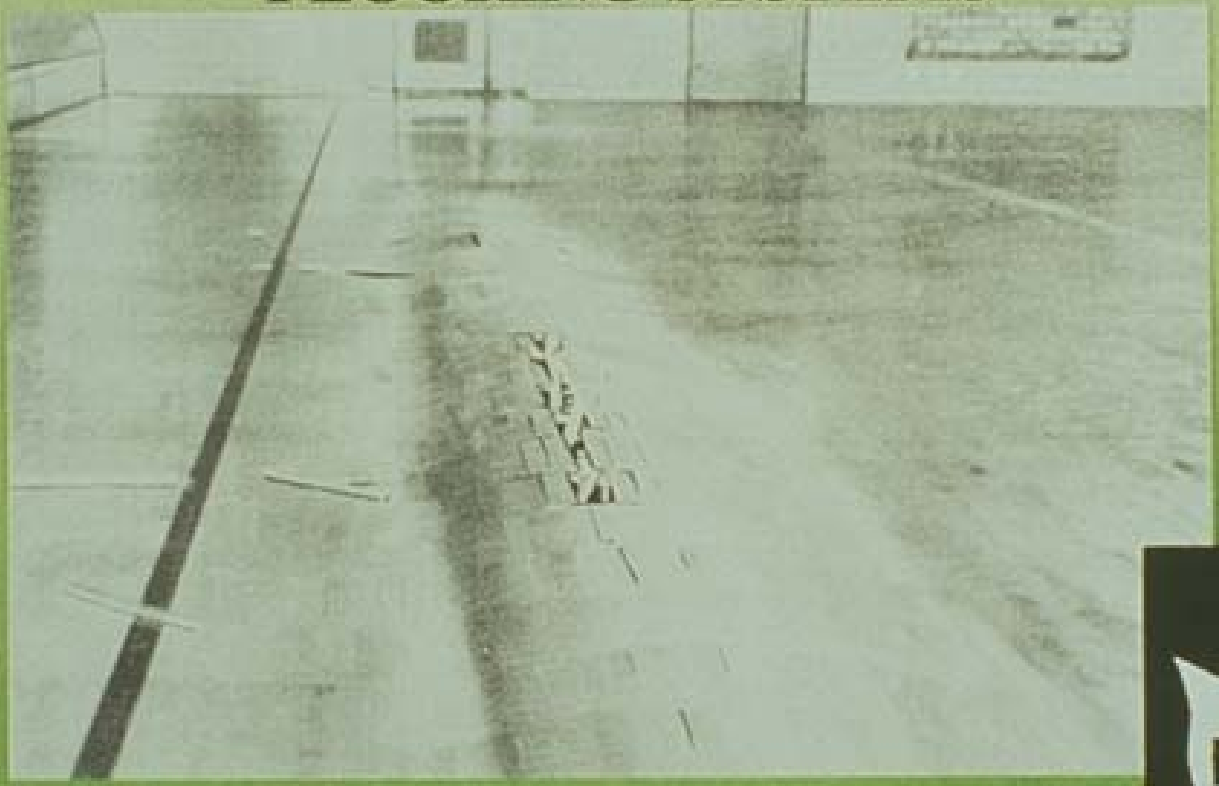

TARKETT

Martin SURFACING, INC.

MFMA

MAPLE FLOORING MANUFACTURERS ASSN.

Consider Durability

- ASTM E 1993

"Standard Specification for Bituminous Water Vapor Retarders used in Contact with Soil or Granular Fill under Concrete Slabs."

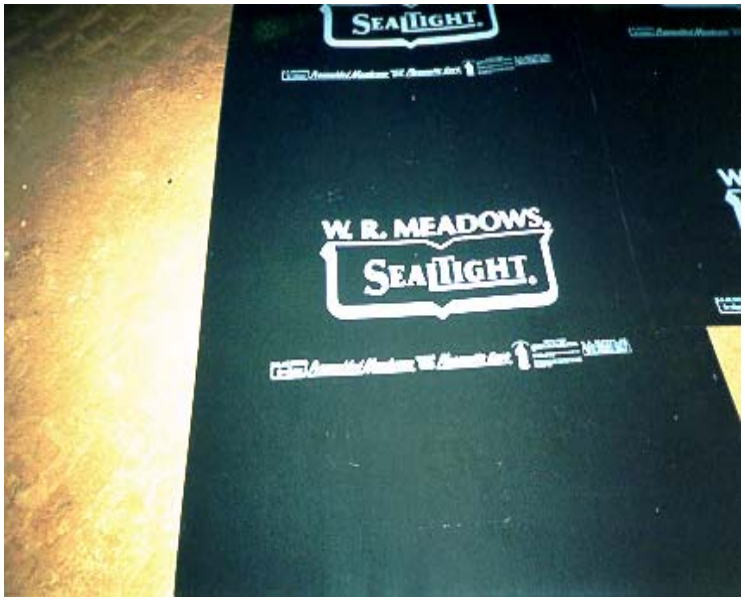

Moisture

MOLD
GOOD
BAD
UGLY

Structural and Architectural Damage

Health Concerns
Productivity
Illness
Death

Energy Costs
Resale
Marketibility

Per the E.P.A

•70-90% of our lives are spent indoors

The American Association of Home Inspectors found mold in 38% of the homes they inspected

Epoxy Injection Ports should be spaced appropriately.

16 7 02

INSTALLATION TIMING IS CRITICAL

10 15 '02

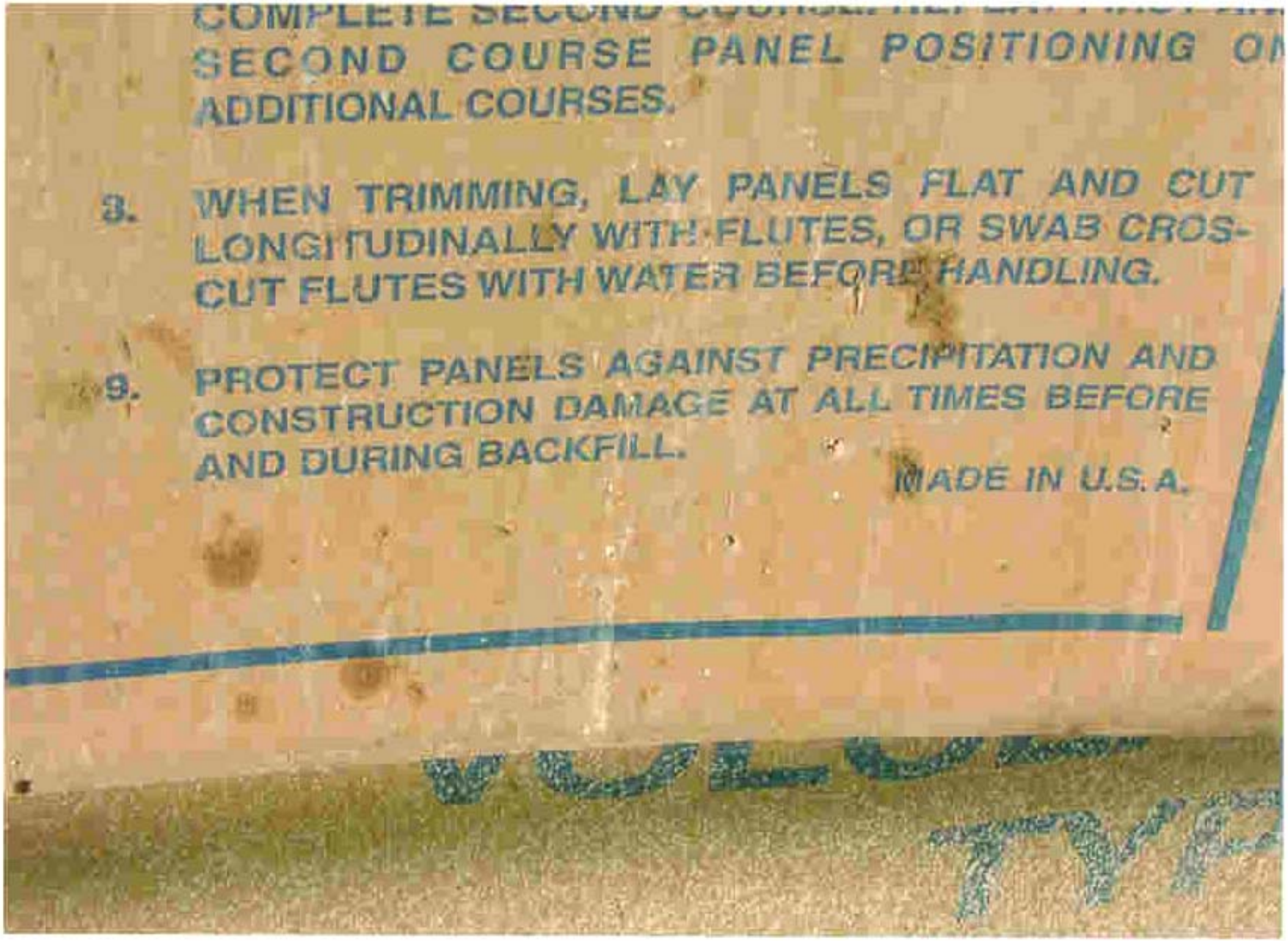
SECOND COURSE PANEL POSITIONING ON
ADDITIONAL COURSES.
8. WHEN TRIMMING, LAY PANELS FLAT AND CUT LONGITUDINALLY WITH FLUTES, OR SWAB CROS-CUT FLUTES WITH WATER BEFORE HANDLING.
9. PROTECT PANELS AGAINST PRECIPITATION AND CONSTRUCTION DAMAGE AT ALL TIMES BEFORE AND DURING BACKFILL.
MADE IN U.S.A.

PROTECT YOUR WATERPROOFING