U.S. Department of Energy
Energy Efficiency and Renewable Energy

High Performance Schools

Presented By: Kenneth E. Redfoot, AIA

CORLEY REDFOOT ZACK
ARCHITECTS ENGINEERS PLANNERS

222 Cloister Court
Chapel Hill, NC 27516
919-401-8586
kredfoot@corleyredfootzack.com

Imagine

there's a school that's the pride of the community, and consumes 35% less energy than conventional schools.

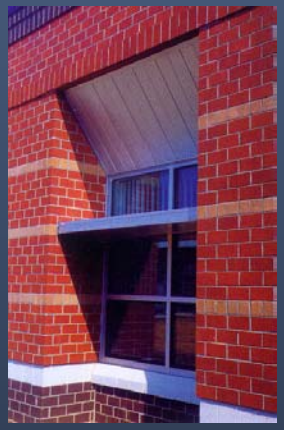

Imagine

there's a restroom that is clean and sanitary, but uses no municipal water to flush toilets.

Imagine

there's a classroom that is bright, cheerful and airy, but the lights stay off most of the day.

Commitment to High Performance Schools

People providing support throughout the community

School Board

- The Chapel Hill - Carrboro City Schools highlights “energy efficiency design and conservation techniques” as important criteria for the selection of architectural firms in October of 1997.
- The establishment of this objective leads to the design and construction of Smith Middle School, the District’s first high performance school, completed in August 2001.
- The School Board adopts S. B. Policy 9040, “High Performance Building Criteria” in February, 2002.
- Rashkis Elementary School opens in August of 2003 as the first school constructed using Policy 9040. The school is designed as a neighborhood school that also shares resources with the Town’s Parks and Recreation Department.

Commitment to High Performance Schools

People providing support throughout the community

Town Government

- Adopts "Energy Conservation in Design and Construction of New and Renovated Town Buildings including Conservation Goals."
- Supports the Million Solar Roof Initiative.
- Encourages New Urban Developments, many that include Neighborhood School Sites.
- Creates Shared Use Agreements with School System for the Mutual Benefit of all Town Residents.
- Develops a Land Use Ordinance that Emphasizes Sustainability and Environmental Sensitivity.

Commitment to High Performance Schools

People providing support throughout the community

County Government

- Requires Solid Waste Management Plans for all Construction Projects
- Recycling Programs
  - Curbside Recycling
  - Construction and Demolition Debris Management
  - Promotes Deconstruction and Salvage Techniques
  - Provides Educational Services
- Develops a Land Use Ordinance that Emphasizes Smart Growth Principles and Environmental Sensitivity.

What are High Performance Schools?

"Designed to improve the learning environment while saving energy, materials and natural resources. The designs are only successful with an integrated design and construction approach."

-School Board Policy 9040

Goals of a High Performance School

- Appropriate and Environmentally Sensitive Site Selection
- Reduce the Use of Water
- Provide High-Efficiency HVAC and Lighting
- Use Materials that Conserve Raw Materials
- Promote Positive Indoor Air Quality
- Provide Balanced Temperature
- Design the School for Visual Comfort
- Limit Excessive Noise
- Provide Training for All Personnel
- Offer Building Commissioning
- Design for Safety
- Use Schools as Community Centers
- Create Stimulating Architecture

Site Selection and Site Development

- Increase Density on Previously Developed Site
- Creation of K-16 Campus
- Pedestrian Connections between Schools
- Shared Use Agreements with Town
- Orientation of Building on the Site
- Connections to Surrounding Neighborhoods
- Encourage Alternative Modes of Transportation
- Provide Covered, Well-lit Bike Racks

Site Selection and Site Development

Bright White PVC Membrane at Smith Middle School

- Implement Erosion and Sedimentation Control during Construction to Protect Nearby Streams
- Carry out Stormwater Management that does not increase the rate or quantity of runoff from the site

'Limestone' Standing Seam Metal Roof at Rashkis Elementary School

- Reduce the Heat Island Effect by using light-colored roofing
- Utilize EPA Energy Star Roofing Guidelines

High Performance Schools

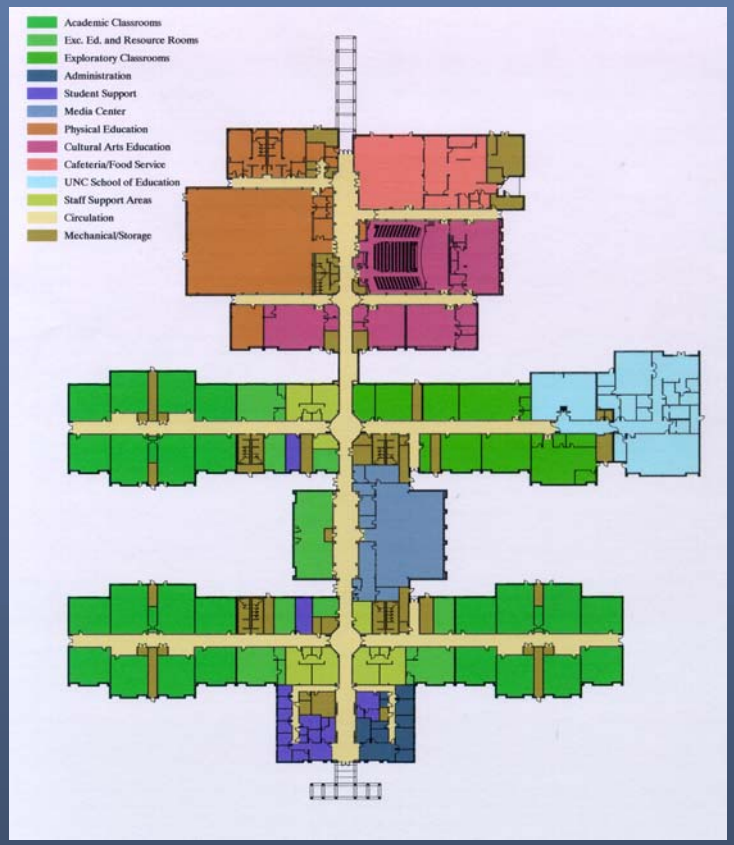

Smith Middle School
Floor Plan

These schools are a direct response to the educational specifications, and first and foremost, provide an excellent learning environment.

Rashkis Elementary School
Floor Plan

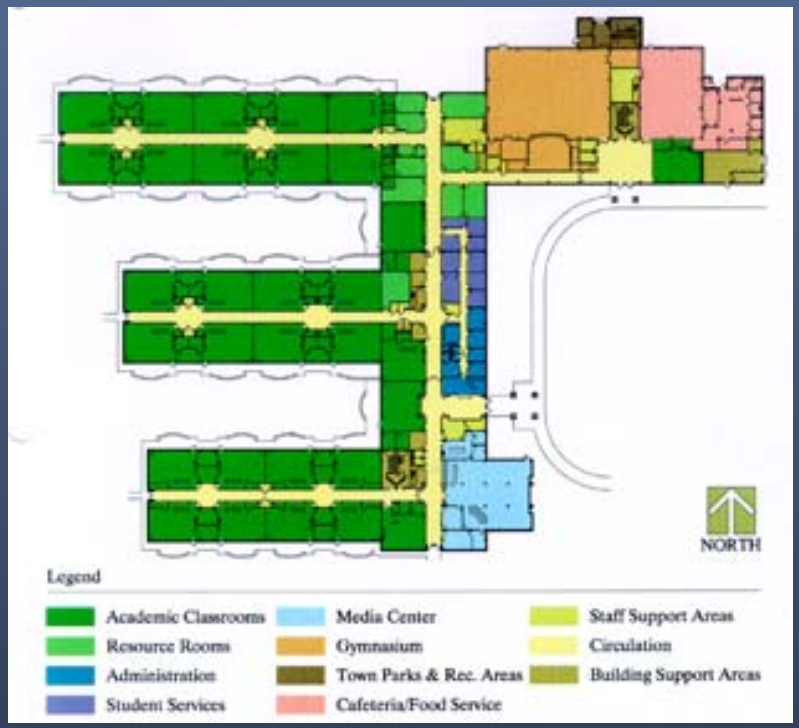

Indoor Environment

Rashkis Elementary School

Smith Middle School

Natural daylighting strategies have been incorporated throughout these school facilities, including academic classrooms, specialty classrooms, media center, cafeteria, gymnasium, and student commons areas. The inclusion of natural daylighting produces significant energy savings, reductions in maintenance and increases in productivity by students and staff.

Indoor Environment

At Smith Middle School, the primary daylighting system consists of roof monitors that allow natural daylight to enter the space from above. Translucent baffles control and distribute the daylight evenly around the room. The roof monitor windows generally face south to take advantage of the higher lighting levels.

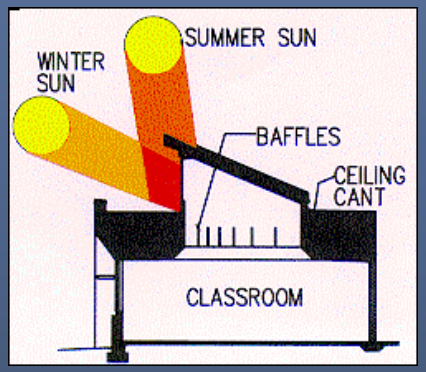

Indoor Environment

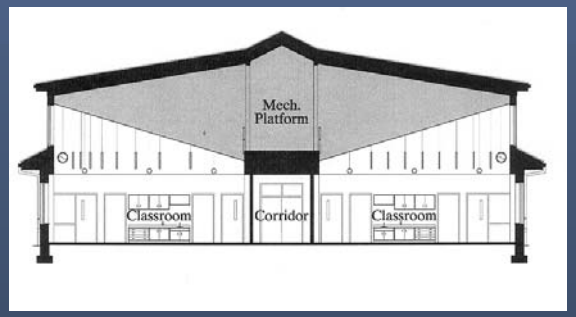

At Rashkis Elementary School, the primary daylighting system consists of shed dormers that allow the natural daylight to penetrate deep into the spaces. Vertical acoustical baffles not only redirect the light around the room, but also provide acoustical absorption to improve the acoustical quality of the space.

Indoor Environment

A secondary daylighting system is incorporated into each design to enhance and supplement the daylight entering the spaces. On the south-facing windows, light shelves are utilized to bounce light deeper into the room, as well as to provide shading on the view windows. White exterior canopies are designed to direct additional daylight toward the dormer windows to increase the available daylight.

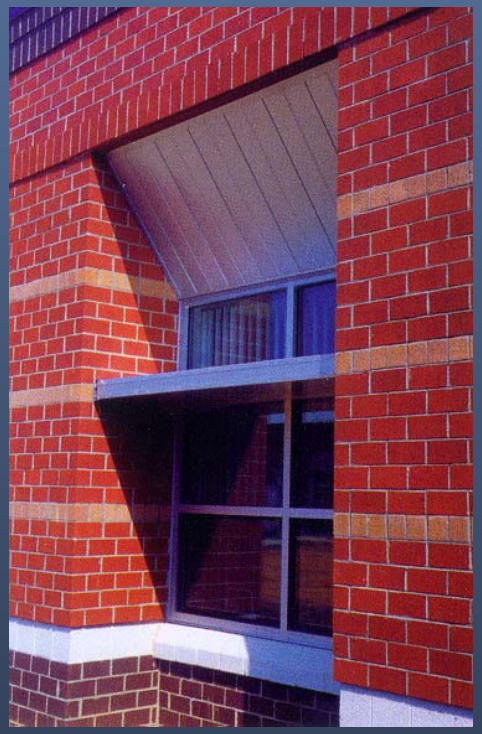

Indoor Environment

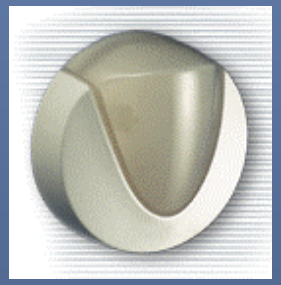

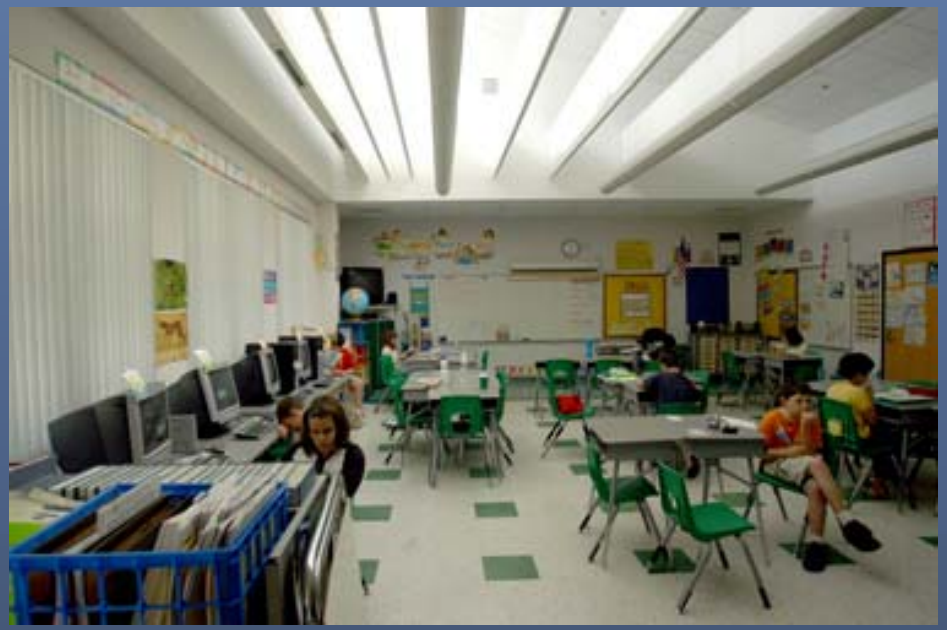

The **Lighting Control System** is a direct response to the Natural Daylighting System. In order to maximize the energy savings due to daylighting, the lighting control system measures the available daylight entering the space, and automatically adjusts the artificial lighting to insure adequate lighting at the work surface. Occupancy sensors are also used to turn off lights when the room is unoccupied. Vertical blinds or blackout shades are incorporated depending on the need for room darkening.

Indoor Environment

Acoustical Quality is crucial to the academic success of every child. By locating the mechanical equipment on a platform above the corridor, all the extraneous noise is isolated from the classroom.

The **Acoustical Quality** in the Classrooms, as well as all other rooms in the school, is enhanced by the use of acoustical panels and fiberglass ceiling tile. In the Cafeteria, brightly colored acoustical wall panels create a cheerful, quiet eating venue.

Reduction in Water Usage

PUBLIC UTILITY DECLARES WATER SUPPLY EMERGENCY

EMERGENCY RESTRICTIONS ON USE OF WATER ARE IN EFFECT

PUBLIC URGED TO CONSERVE

Reduction in Water Usage

SCHOOLS UTILIZE RAINWATER COLLECTION AND REUSE SYSTEM

RAINWATER USED TO IRRIGATE FIELDS AND FLUSH TOILETS

SCHOOL SYSTEM SAVING OVER 380,000 GALLONS OF WATER PER YEAR ON EACH CAMPUS

Reduction in Water Usage

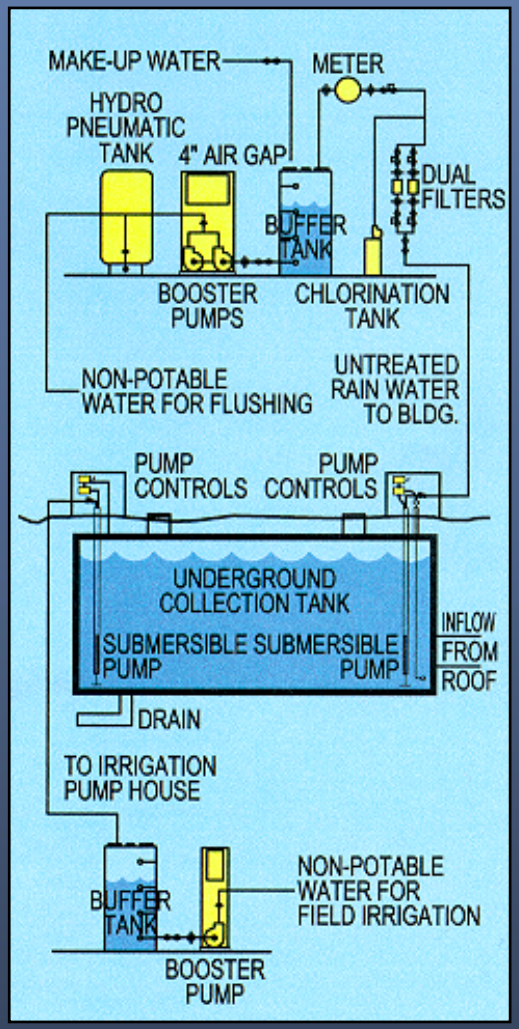

A **Rainwater Collection and Reuse System** is utilized by the school system to capture all the rainwater hitting the school's roofs and to reuse the rainwater for toilet flushing and for irrigation. The School System has saved over 380,000 gallons of water per year on each campus.

The rainwater collection system begins at the roof. Standard roof drains, gutters and downspouts lead to a network of pipes, converging at a series of underground, fiberglass tanks located below the courtyard. The storage tanks vary in capacity from 50,000 to 80,000 gallons depending on the size of the school.

Reduction in Water Usage

The collected rainwater is then pumped back into the building where it is filtered, chlorinated and stored for later usage. The treated, non-potable water is then pumped through special, purple piping to flush toilets and urinals throughout the school. It is pumped through these colorful pipes so that in the future there is no confusing it with drinking water. A portion of the rainwater is also used for irrigation of landscaping.

Reduction in Water Usage

The irrigation systems for the athletic field at Smith Middle School and for the landscaping at Rashkis Elementary School are supplied by the Rainwater Reuse System. Indigenous and drought-resistant plants were installed to insure their growth.

Reduction in Water Usage

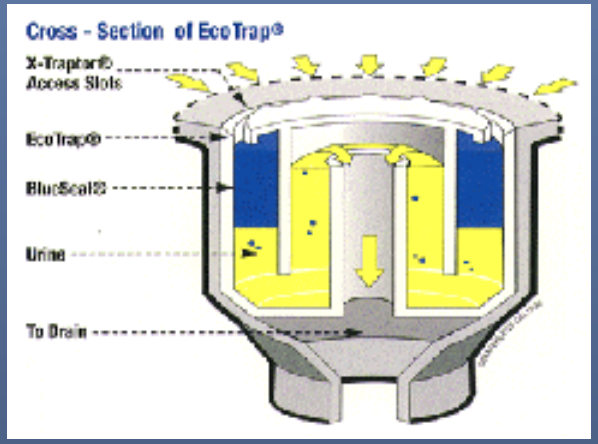

Waterless Urinals have been installed in public restrooms as an additional measure to reduce the amount of water used in the schools. These fixtures use a chemical seal instead of normal flushing to extract the waste to the sewer.

Construction Waste Management

During construction of these schools, a **Construction Waste Management Program** was specified in the construction documents and implemented by the Contractors.

Working together with the County's Solid Waste Management Department, the Contractor separated construction debris and salvageable materials by category and transported the materials to a reclamation landfill. As a result of these efforts, **over 70% of construction debris was recycled or reclaimed** for future use.

Wood	27.4 tons	15%
Drywall	6.5 tons	3%
Ferrous Metal	30.0 tons	16%
Non-ferrous Metal	3.9 tons	2%
Corrugated Cardboard	36.4 tons	19%
Aggregate/Dirt	29.8 tons	16%
Total Recycled Materials	**134.0 tons**	**71%**
Total Land filled Materials	54.0 tons	29%
Total of Materials Hauled	188.0 tons	

Material Selection

The construction materials and finishes were carefully selected and specified to meet the high performance building guidelines:

25% of the building materials had a recycled content rate of 20% or more.

- Asphalt Paving
- Structural Steel
- Acoustical Ceiling Tile
- Vinyl Composition Tile
- Concrete Paving and Curbing
- Cast-in-place Concrete
- Concrete Masonry Units and Brick
- Manufactured Casework

Reduction in Energy Usage

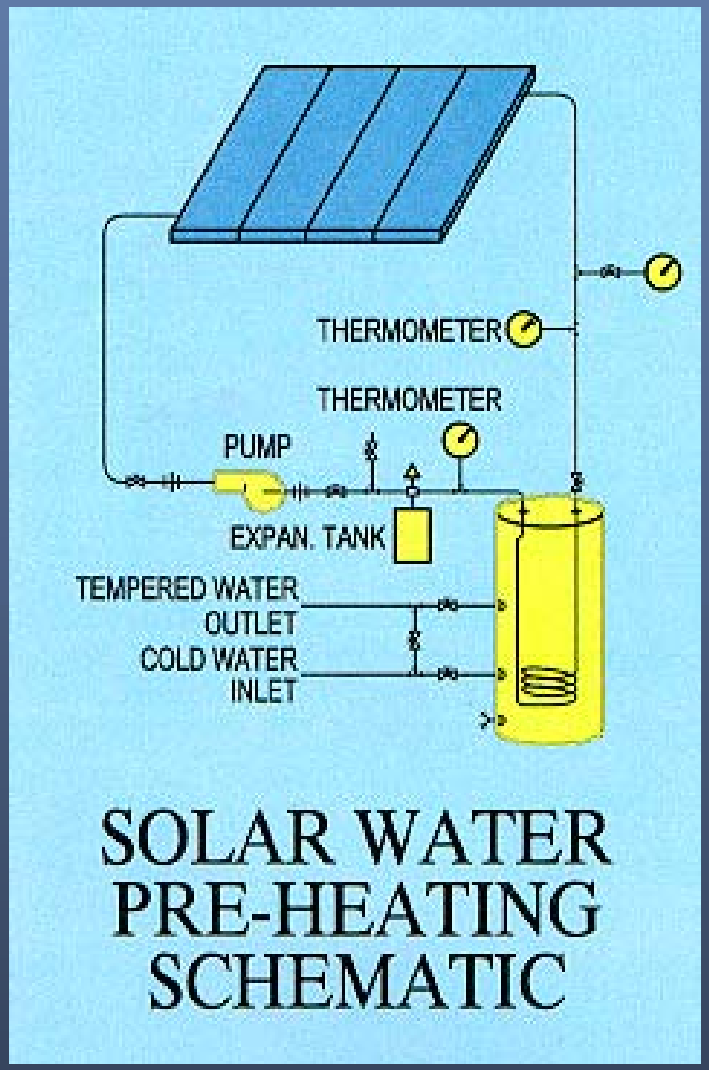

The **Solar Water Preheating System** is designed to utilize the sun's energy to preheat the domestic water prior to its final heating for cleaning and food preparation use in the kitchen. Preheating the water will reduce the conventional fuel usage of the school. The solar panels are typically located on the roof near the cafeteria to take advantage of the orientation to the sun, and because of its proximity to the main mechanical room.

Reduction in Energy Usage

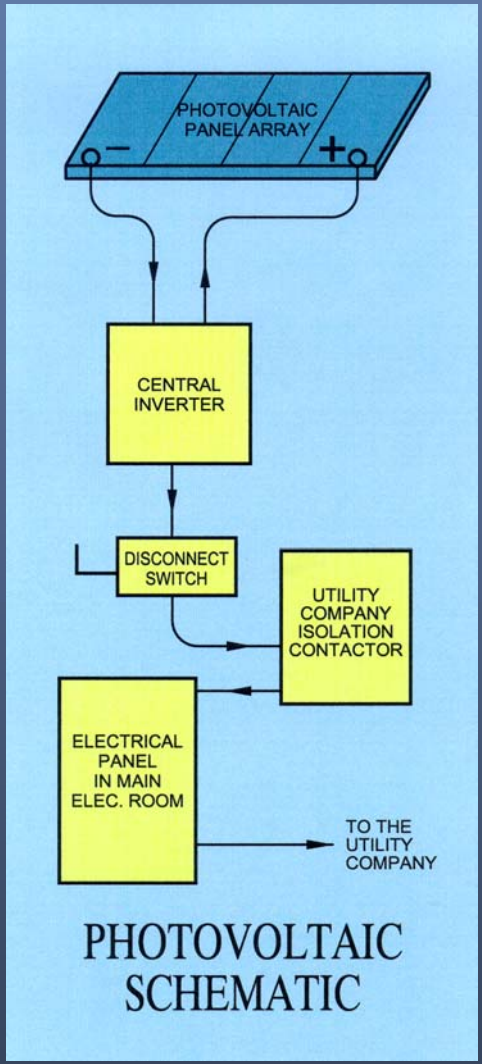

A **Photovoltaic (PV) System** has been incorporated on many new school projects. The PV panels convert the energy of the Sun into an electrical current that can be used by the building occupants or to power a specific electrical system, like exterior lighting.

Reduction in Energy Usage

Energy Efficient Systems and Components

- Site Orientation to optimize daylighting potential and minimize eastern and western exposure
- Deep overhangs to reduce cooling loads on exterior walls
- Large, operable windows located in all student occupied areas
- Natural Daylighting System
- Low-E Glass used where recommended
- High-efficiency electric lighting system with T-8/electronic ballast technology
- Electronic Lighting Control System that adjusts lighting fixtures based on available daylight
- Motion Detection Lighting Switches
- High-efficiency Exit Lighting
- Photovoltaic System
- High-efficiency Boilers and Chillers
- HVAC Zones that reduce the heating and cooling loads when the school is not fully occupied
- Heat Recovery Ventilation System
- Solar-Assisted Domestic Water Heating
- Rainwater Collection and Reuse System for irrigation and flushing
- Low-flow Shower Heads
- Hydronic Economizers
- Variable Speed Pumping Systems
- Energy Management System controlled by School System Staff

Reduction in Energy Usage

Building	Energy Use (btu/sf/yr.)	Operating Cost ($/sf/yr.)
Energy Code Min. Reqs.	95,000	$1.24
Smith Middle School	62,500	$0.84
Rashkis Elementary School	59,500	$0.80

Life Cycle Cost Analysis

Many tools are available to Architects and Engineers to assist them in the design and analysis of high performance schools.

Radiance is software that simulates and renders daylighting schemes.

DOE-2 is software put out by the US Department of Energy to simulate the energy needs of a facility during the design process.

The Costs of High Performance

School Name	Bid Date	Gross Area	Cost per SF
Scroggs Elementary	January 1998	91,000sf	$95.50
Smith Middle School	November 1999	129,000sf	$98.54
Cedar Ridge High School	October 2000	208,000sf	$92.29
Rashkis Elementary	February 2002	95,000sf	$101.56

The Benefits of High Performance

High Performance Facilities make long-term economic sense.

Good for the Budget

- Reduced energy and water usage means better stewardship of public resources.
- Use of proven, prototypical designs means savings of time and money.

The Benefits of High Performance

High Performance Facilities make long-term economic sense.

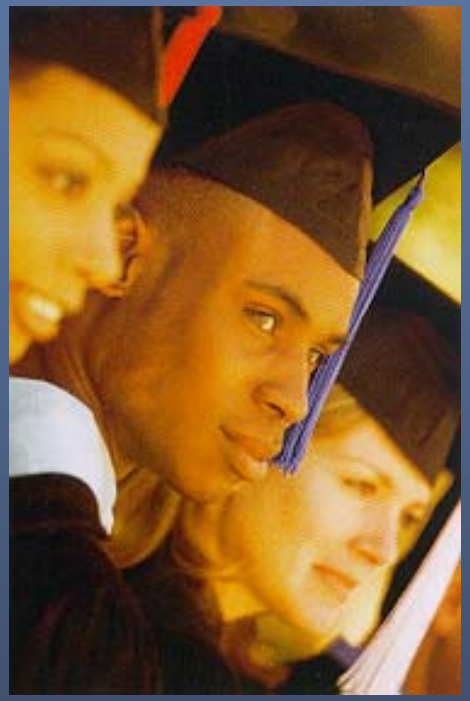

Good for Academic Success

- Easier time attracting and retaining quality teaching professionals.
- Control over one's immediate environs enhances well-being and productivity.
- Learning is enhanced with improved indoor air, light and acoustical quality.

The Benefits of High Performance

High Performance Facilities make long-term economic sense.

Good for the Community

- Using the principles of Smart Growth and High Performance Facilities means that the needs of the present are met without compromising the ability of future generations to meet their own needs.

The Benefits of High Performance

Education and Training Programs are essential to the long-term operation and energy savings of high performance systems. Training programs must be completed by the Maintenance and Custodial staff, so these systems become a normal part of their work life. And Faculty members should be educated as well to insure they understand the benefits of the high performance systems in their teaching environment.

Schools as Teaching Tools

"It's going to be really fun, because usually we learn from models, but here we're actually going to use the school. I'm going to learn how things work at school, and I'm going to put it into my own life."

- Smith Middle School 7th Grader

Resources

There are many available resources to learn more about High Performance Facilities. Some these resources are:

"High Performance Building Criteria, School Board Policy 9040"
Chapel Hill-Carrboro City Schools. Available at their website www.chccs.k12.nc.us

"High Performance Guidelines: Triangle Region Public Facilities"
Triangle J Council of Governments. Available at their website www.tjcog.dst.nc.us

Rebuild America's Energy Smart Schools
U. S. Department of Energy. Available at their website www.energysmartschools.gov

LEED (Leadership in Energy and Environmental Design) Green Building Rating System
U. S. Green Building Council. Available at their website www.leedbuilding.org

Experienced Architects, Engineers, Contractors and School Board Members