Solar for Hot and Dry Climates

The U.S. Solar Resource is Tremendous

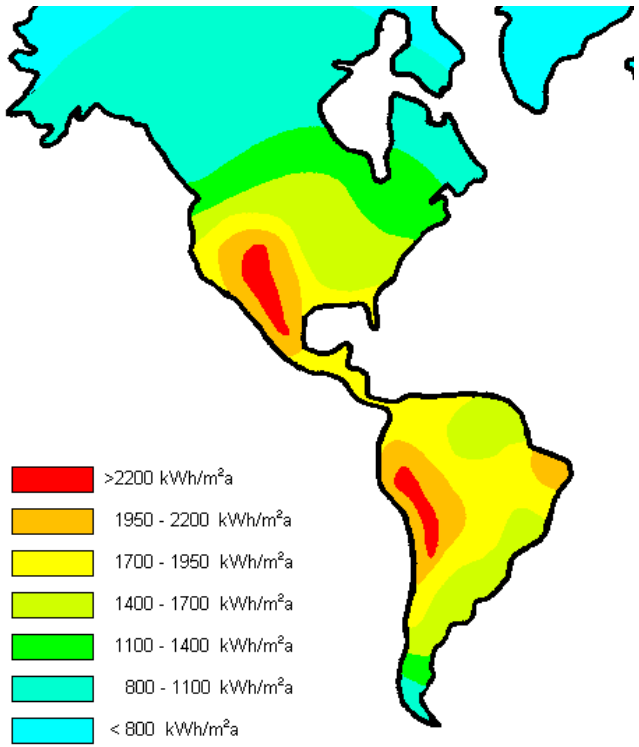

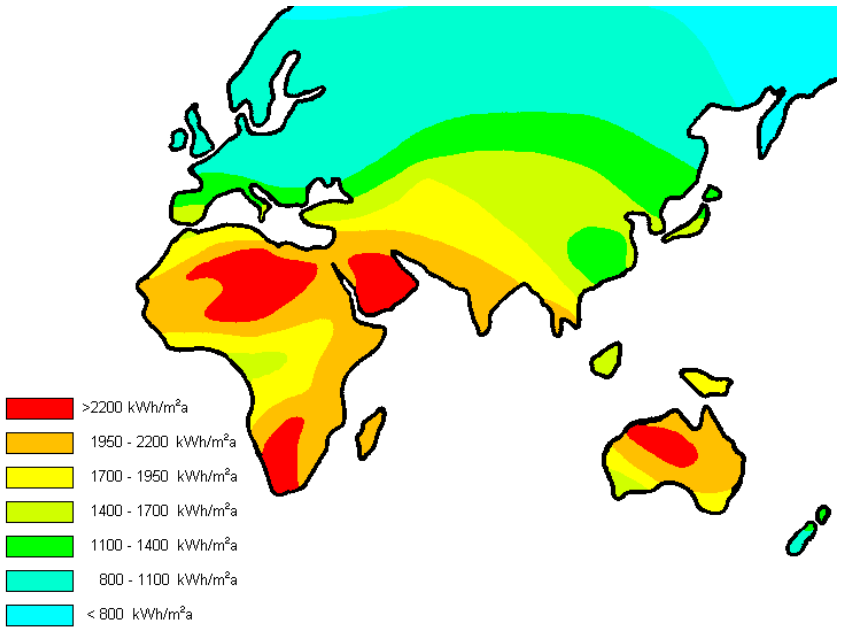

Solar HVAC

Solar-Driven Ab/Adsorption Cooling and Heating

- Included in the "Energy Design Guidelines for Hot and Dry Climates"
- Combines traditional chiller plants with solar energy, displacing a large portion of the natural gas or electricity requirement
- Provides space heating, air conditioning and hot water

How It Works

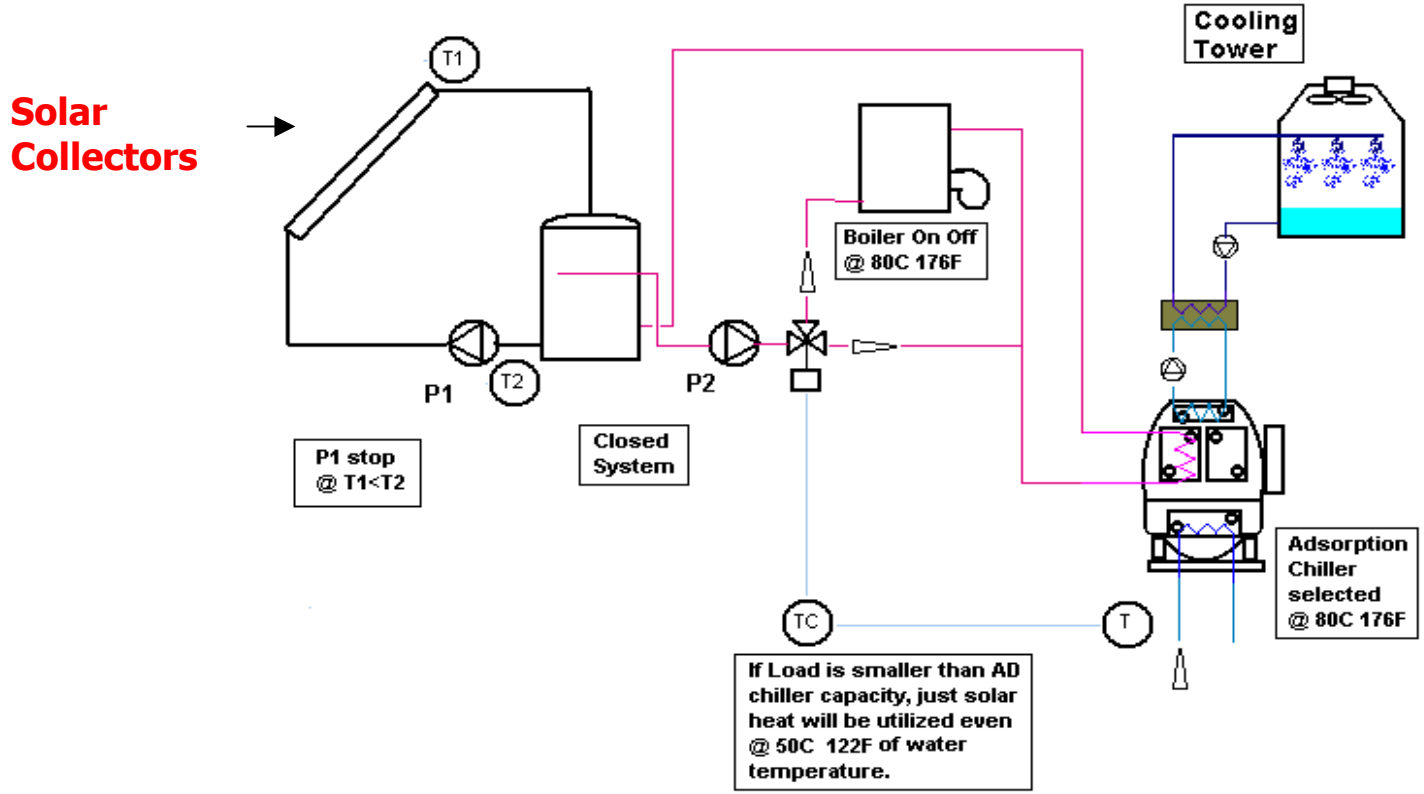
Solar Collectors
T1
T2
P1
P2
P1 stop @ T1<T2
Closed System
Boiler On Off @ 80C 176F
Cooling Tower
Adsorption Chiller selected @ 80C 176F
TC
T
If Load is smaller than AD chiller capacity, just solar heat will be utilized even @ 50C 122F of water temperature.

Building Requirements

Applied to Either New or Retrofit

- Any Type of Roof (Can also be installed as a roof or a facade)
- 2 Pipe System in the Building
- Chiller System instead of Air or Water Cooled Pumps
- Backup System; Gas Boiler, Electric Chiller, or Cogeneration/Microturbines

Advantages

- Saves money
- Offers long-term price stability
- Reduces consumption of fossil fuels significantly
- Protects the environment and lowers CO_2 emissions
- Allows independence from energy imports
- Assists utilities by lowering consumption during peak periods
- Tremendous educational value

Case Study, New K-12 School

School District's Design Objectives:

- Sustainable design
- LEED awareness throughout design
- Renewable contribution
- Local and regional recognition
- Long-term O&M savings (not provided by all companies)
- Turn-key mechanical package (not provided by all companies)
- Save $30,000 annually in utility costs

School's Projected Characteristics

- One 70,000 square foot building
- No swimming pool or kitchen (minimal water requirements)
- 250 ton (peak load) @ ton / 280 SF
- Annual utility costs: $ 91,508
  (Electric: $83,199 - Gas: $8,309)
- Cooling cost: $69,282
- Blended electric rate: $0.08 / kWh
- Natural gas rate: $0.80-85 per therm

The Solution

- A chiller system with an electric chiller or gas boiler back-up.
  (A chiller is more efficient and requires replacement less often, resulting in some long-term savings not represented here.)
- 6,214 total square feet of solar collector installation:
  - 55 solar collectors of 112 square feet each (6,160 square feet total)
  - The 112 square foot panels are interconnected in a patented system, using a special coating which increases the efficiency of the system.
  - The system requires 10-15% of (single story) roof space to serve approximately 65% of the total load cooling and heating load.
  - The collectors deliver 167-203 (degree) water to the absorption chiller.

Energy Savings

Handles 69% of the Heating

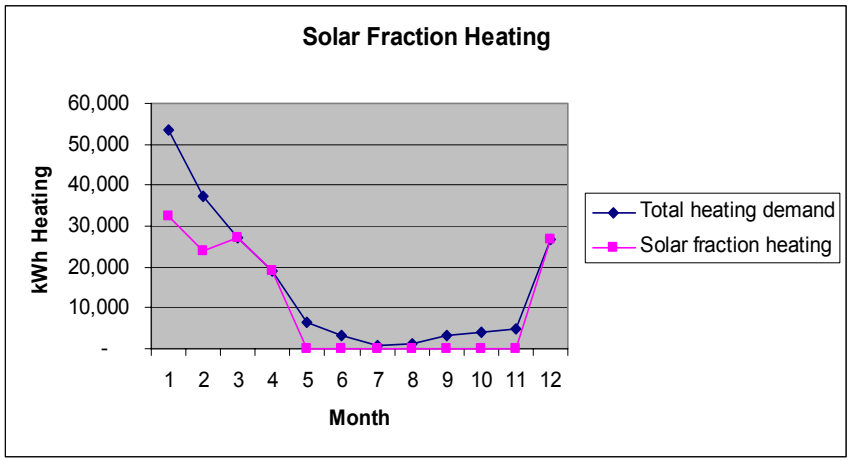

Covers 60% of the Air Conditioning

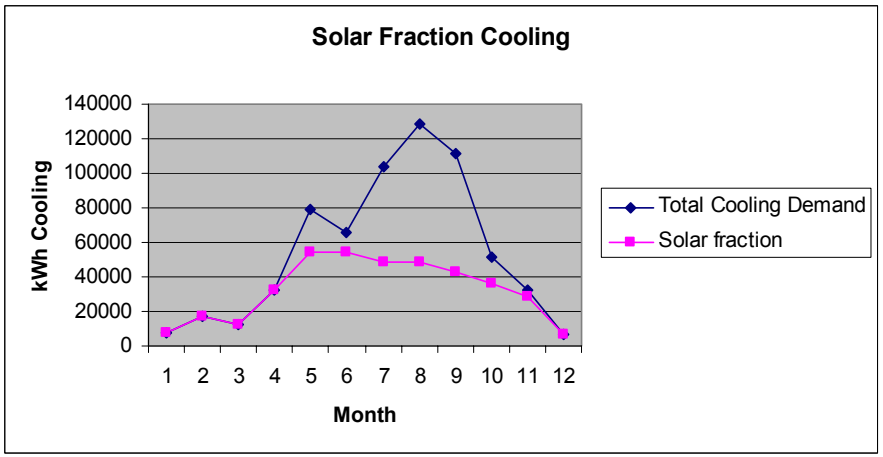

System also provides 100% of the hot water required.

Annual Cost Savings

Electricity - $23, 398

Gas - $5,486

Electricity with Gas - $3,295 Savings Summary - $32,180*

Goal - $30,000 Savings

*Savings does not include additional amount resulting from a long-term O&M contract.

Cost Comparison

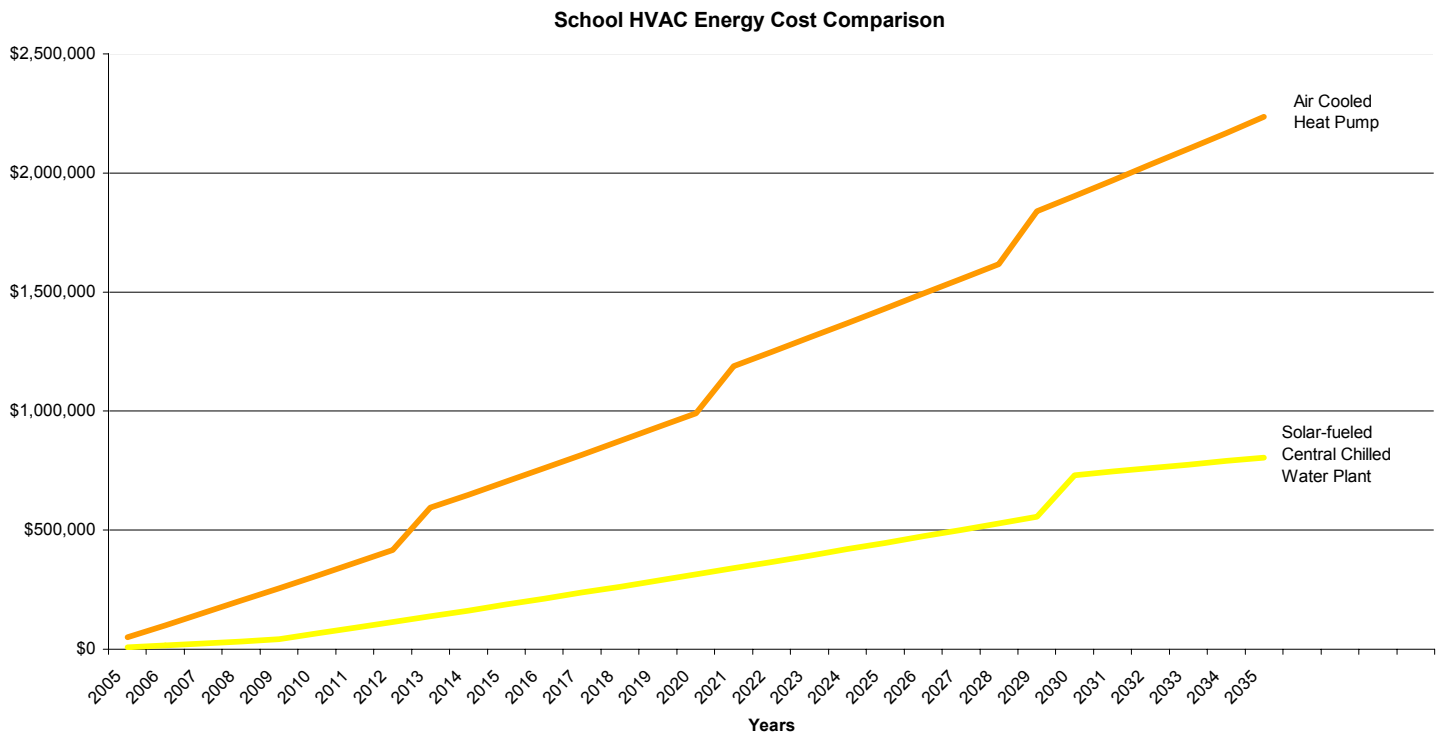

System Components

Included in Price

- Solar Collectors and Collector Framework Support
- Solar Distribution Piping
- Cooling Tower and Pumps
- Storage
- Chiller(s)
- Controls
- System Design/Engineering
- Start-Up and Commissioning

Not Included

- HHW & CHW Distribution System
- Fan Coil Units
- Air-Handling Units
- Back-Up
- Construction of Building, Technical Room etc.
- Sstructural Demands of the Roof
- O&M (Service Agreement)

Energy Savings Contracting*

- Long-term contracts that share the energy savings – 'ESCO' contracts
- Traditionally have been for lighting, etc.
- Solar is moving in this direction
- Photovoltaic is more prevalent but less efficient and more expensive then solar HVAC
- Requires 15-20 year contract

*Restricted in Arizona due to 1) contract time limits and 2) payback requirements.

Additional Advantages*

- Commercially-proven and completely warranted for 10 years
- Guaranteed savings
- **Zero** capital cost
- Additional savings because O&M costs are included
- Short installation time
- Long equipment life (25-30 years)
- Further savings when installed as a roof
- Telemonitoring software increase efficiency

*These advantages are not offered by all companies.

Steps to a Successful Project

1. Work with a proven technology and/or company
2. Consider participation from your local utility
3. Start the process early
4. Require an equipment warranty
5. Enter into a long-term energy savings contract if possible
6. Require a guarantee on savings
7. Enter into an O&M contract if not included

Solar is the Future
For our Children